DOI: 10.2478/sbeef-2022-0015

MANAGEMENT AND MODELING OF A HYBRID ELECTRIC VEHICLE

ABDELHAMID KSENTINI[1], ZAKARIA HADEF [2] EL-BAHI AZZAG[1]
[1]Electrotechnical laboratory, Badji- Mokhtar University P.O Box 12, Annaba,Algeria.
[2]Department of Physics, Faculty of Sciences, University 20 Août 1955, BP 26, 21000, Skikda, Algeria
E-mail: hksentini86@gmail.com, abdelhamid.ksentini@univ-annaba.dz

Abstract. ***The use of solar electric vehicles (SEV) has recently been the subject of frantic communication by many researchers in this sector such as researcher (GASBAOUI Brahim and F. Burling). In this research, we focused on adopting other renewable energy sources, such as wind energy, to convert this energy into kinetic energy for the vehicle (EVWTG electric vehicle). The main aim of this research is to adopt the principle of a wind turbine generator in order to power an electric vehicle (EV), which relies on energy of the air currents on the surface of the vehicle and converts them into electrical energy to feed the electric motor simultaneously or storage by batteries. This system has several draw backs such as continuous energy production and controlling the speed of the wind turbine. For this, we developed a technique to ensure the production of electrical energy and its management according to the proposed system energy management technology. The operation model of the proposed EVWTG system was simulated using MATLAB, where the results obtained proved the effectiveness of the proposed control and energy management, which can be used in other practical studies in the future.***

Keywords: wind turbine, battery, modelling, power management and control, electric vehicle.

1. INTRODUCTION

After several years, the car fleet has become unmanageable by the growth in the number of vehicles by the intense competition between the developed countries. The rise of this explosion especially in emerging countries like India and China has forced the governments of these countries and others to take preventive measures to reduce the emissions of pollutants into the environment [1]. At the beginning of the 1970s, the first initiative to protect the environment against pollution appears and obliges developed countries (sources of atmospheric pollution) to find technical solutions to reduce CO_2 emissions [2]. Imposing these standards will force industrialized countries in general to sign restriction conventions at conferences on climate change and its warming. So far, the increase in carbon dioxide (CO_2) emissions is a matter of concern for these governments as it has very serious impacts on human life and the environment [3]. There will be climatic upheavals causing changes in ecosystems, such as floods and earthquakes. To find a solution to this global problem. In this research, we have made a simple contribution which will help in the near future on this problem (eliminating air pollution) is based on studying an electric vehicle (EV) clean source such as Wind Turbines Generator (WTG). This study is a topical research topic that includes general topics in several area. The main aim of this work is to harness renewable energy (wind power) and use it to run the car without using fuel. This work requires knowledge of energy sources, electronic converters, electric motors, and electric control algorithm. The control algorithm of an electrical system is imperative in any electrical field to ensure the work and the best management of the power between the different components of the system. This work is properly organized where the introduction is presented as follows: We have described the whole system studied and the modelling of its components with the analysis of the control and the management of the power supply. The results obtained are conclusive and are mentioned at the end of this article. Finally, we concluded our article with a conclusion reflecting the different stages of our work.

2. SYSTEM DESCRIPTION (EV_{WTG})

Figure 1 shows a simplified diagram of a system that has the following various electrical components: WTG generator, Battery, Anemometer, Motor, Rectifier, Inverter, Bidirectional DC/DC converter and MPPT controller.

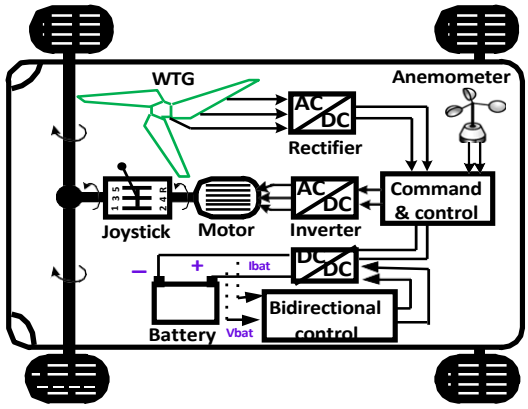

Figure 1. Schematic of the EV_{WTG} system

This system is equipped with an electric control system to make the system more efficient and stable. For study of electric vehicle (EV_{WTG}), this system must be modelled to simulate proper operation. The development of a model (modelling) consists in using a physical law, an empirical calculation rule or a system of differential equations to build a relatively satisfactory model considering the objectives and the resources available. Whatever the purpose of the modelling, the model obtained is often an imperfect representation of the real process, because of a lack of knowledge on certain phenomena, or because of a deliberate simplification responding to practical constraints. The complete vehicle model (EV) is composed of a set of sub-models linked to different parts of the power train and to the dynamics of the vehicle [4].

3. DYNAMIC AND ELECTRICAL MODELING OF EV_{WTG}

3.1. Balance sheet of forces

EV is characterized by a certain number of resistive torque. The diagram in Figure 2 explains the forces applied to the vehicle during its movement.

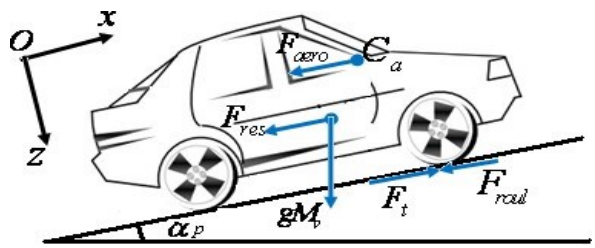

Figure 2. Forces applied to the vehicle.

The principle of modelling kept requires always carrying out the balance of forces applied to the vehicle. They are defined as follows [5]:

- *Aerodynamic resistance force (Faero)* is expressed as follows [6]:

$$F_{aero} = \text{sgn}(v_h)\frac{1}{2}\rho C_x A.v_h^2 \quad (1)$$

- *Gravity force (Fp):* It has two components, tangential and normal:

$$\begin{cases} F_{Px} = Mg\sin\alpha \\ F_{Py} = Mg\cos\alpha \end{cases} \quad (2)$$

The part entering into account in the mechanical balance is the tangential one.

- *Rolling resistance force (F_{roul}):* This force can be expressed as a function of the tyre rolling coefficient (μ) and the vehicle mass (M), [7].

$$F_{roul} = \mu Mg \quad (3)$$

3.2. Modelling of WTG

Electrical energy is produced after converting kinetic energy to wind speed through a wind power system. The evolution of the power of a specific coefficient is given to each wind turbine [8-9]:

$$Cp(\lambda,\beta) = 0.5176\left(\frac{116}{\lambda_i} - 0.4\beta - 5\right)e^{\frac{21}{\lambda_i}} + 0.0068\lambda i \quad (4)$$

Figure 3 describes the variations of the power factor Cp (λ, β) of a wind turbine, as a function of the set speed λ for different values of the angle inclination of the blades (λ=TSR) by a technique pitch control.

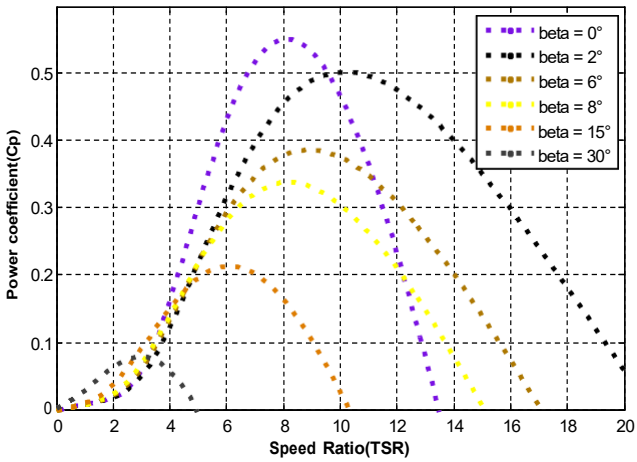

Figure 3. Wind turbine characteristic curves.

The aerodynamic torque can be defined by the following equation:

$$C_{aer} = (\lambda,\beta)\frac{1}{2}.\rho.S.V_m{}^3.\frac{1}{\Omega} \quad (5)$$

The multiplier (*G*) increases / decreases the speed of rotation of the turbine according to the needs of the generator. It can be represented by the following mathematical relation:

$$C_{aer} = G{\cdot}Cg \quad (6)$$

The mechanical torque (C_m) of the generator can be calculated by the following mathematical relation:

$$C_m = J\frac{d\Omega_m}{dt} \quad (7)$$

Finally, the total inertia of the generator (J) is defined as follows:

$$J = \left(\frac{J_t}{G^2} \right) + J_g \quad (8)$$

Where:
J_g: Inertia of the synchronous generator.
J_t : turbine inertia.

A) Turbine speed control technology

To check the speed of rotation, we used the Maximum Power Point Tracking (MPPT) technology of a turbine. This technique is based on the use of the PI corrector to give more stability to the speed of rotation. For this technique to work properly, the best ratio must be set at a value of, provided that the wedging angle β = 0°, [10-11].

$$\lambda_{opt} = \frac{\omega_{opt}.R}{v} \quad (9)$$

Where:
λ_{opt}: Tip speed ratio optimal (TSR)
ω_{opt}: Rotor angular speed optimal.

The following expression is the optimum power captured by the wind:

$$P_{opt} = C_{p-\max} * \rho * 0.5 * A * \left(\frac{\omega_{opt} * R}{\lambda_{opt}} \right)^3 \quad (10)$$

Figure 4 is turbine speed control obtained from the previously mentioned equations.

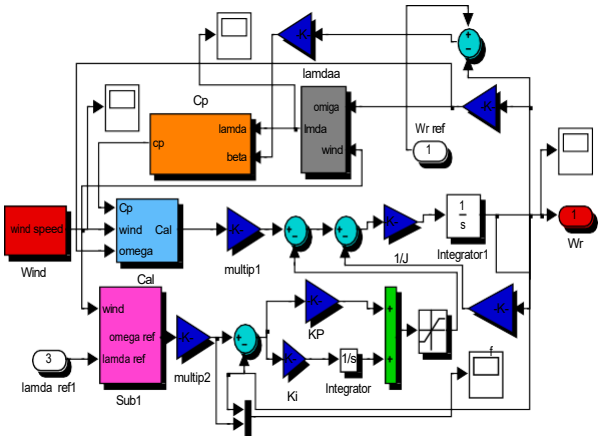

Figure 4. Speed regulation control.

Figure 4 has a turbine speed regulator. This system helps to give stable results and protect the wind turbine from damage and combustion. Figure 5 gives an experimental example of the WTG placement on the Peugeot vehicle (P207):



Figure 5. Experimental placement of WTG in the Peugeot (P207)

To obtain experimental data to implement the system. We have used new technology devices that have a set of sensors and an anemometer [12]. These devices can estimate wind and vehicle speed (see Figure 6).



Figure 6. Experimental anemometer placement (P207)

3.3 Battery modelling and control

In an electric vehicle (EV_{WTG}), the battery is the main element that stores electrical energy. The battery can be represented by a sequence voltage source E_{bat} with internal resistance r_{bat} shown in Figure 7, [13].

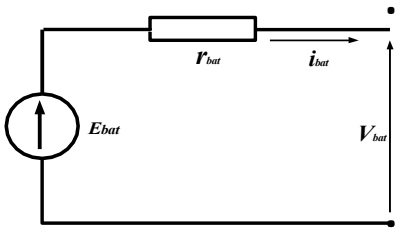

Figure 7. Battery electric model (LEAD-ACID)

Voltage of battery V_{bat} is calculated by:

$$V_{bat} = E_{bat} - r_{bat} \cdot i_{bat} \quad (11)$$

As the internal voltage E_{bat} is assumed to be a function only of the state of charge (SOC), [14-15] or the depth of discharge (DOD_{bat}), [16]:

$$E_{bat} = n(2.15 - DOD_{bat} \cdot (2.15 - 2.00)) \quad (12)$$

Where:

$$SOC_{bat} = \frac{C_{current}}{C_{total}} = SOC_{b_{int}} + \frac{100}{C_N} \int i(t)dt \quad (13)$$

$$DOD_{bat} = 1 - SOC_{bat} \quad (14)$$

Figure 8 shows the state of charge/discharge of a battery whose first charge SOC = 60%.

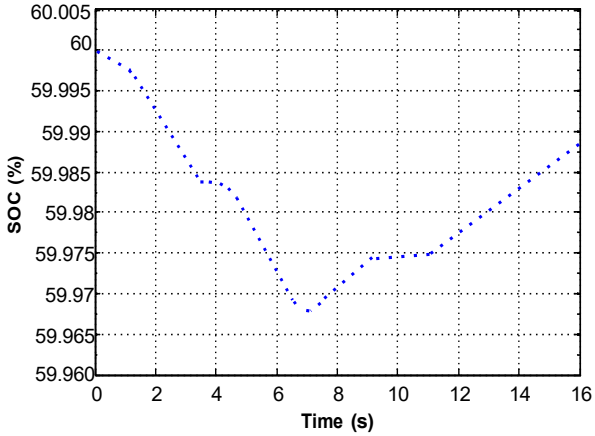

Figure 8. Battery charge curve

3.4 Modelling the buck-boost converter.

In this work, the battery is connected by a DC/DC buck-boost converter. We can implement a bidirectional DC-DC converter by using two switch, the first switch (Tp) implemented shunt for boost operating, another switch implemented series (Ts) for buck operating (See Figure 9).

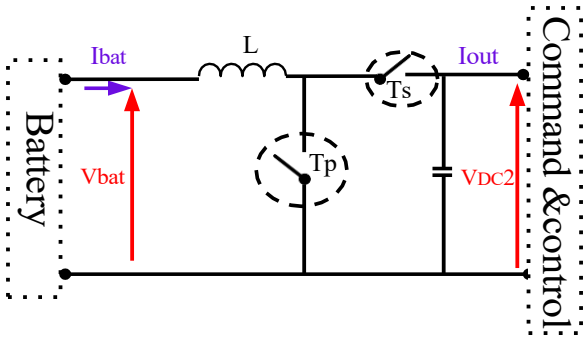

Figure 9. Simple bidirectional DC/DC converter circuit.

The power flow from the battery is carried out via Boost mode while Buck mode is used when the battery is discharged [17-18]. PID controllers are used to control battery Buck-Boost [16]. Figure 10, shows the control diagram of the converter, knowing that the reference current is calculated by the following law.

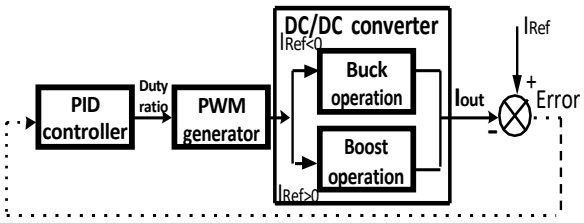

Figure 10. Control diagram of battery.

3.5 Inverter modelling

For the modelling of the voltage inverter, we opted for a modelling method with variable topology [19]:

$$\begin{bmatrix} v_p \\ v_o \\ v_j \end{bmatrix} = \frac{V_{DC2}}{3} \begin{bmatrix} 2 & -1 & -1 \\ -1 & 2 & -1 \\ -1 & -1 & 2 \end{bmatrix} \begin{bmatrix} S_p \\ S_o \\ S_j \end{bmatrix} \quad (15)$$

With S_i it is the state of the switch, such as $i^{ème}$ for the inverter arm (p,o,j).

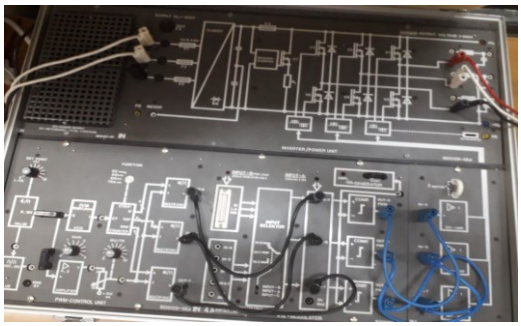

Figure 11. Experimental photo of a three-phase inverter

For this system (Figure 11) to give the best performance, it must be studied with a proper command whose control is shown in the next section.

3.6 Electric motor modelling

The electrical and dynamic behaviour of a synchronous motor with permanent magnets is based on the mathematical model mentioned by the following equations [20-21]:

$$\begin{cases} U_{sd} = R_s i_{sd} + \frac{d\psi_{sd}}{dt} - \omega_r \psi_{sq} \\ U_{sq} = R_s i_{sd} + \frac{d\psi_{sd}}{dt} + \omega_r \psi_{sd} \end{cases} \quad \begin{cases} \psi_{sd} = L_d i_{sd} + \psi_f \\ \psi_{sq} = L_q i_{sq} \end{cases} \quad (16)$$

The following equation is the electromagnetic torque:

$$C_e = \frac{3}{2} p((L_d - L_q).i_{sd}.i_{sq} + \psi_r.i_{sq}) \quad (17)$$

Where U_s says stator voltage, i_s indicates stator current, R_s indicates resistance, Ψ represents the flux, L inductance, the indices d and q represent the direct and quadrature components, ω_r is the rotational speed of the generator and P indicates number of pole pairs. Using the electrical equations written previously, we can create the synchronous motor simulation block which is presented in Figure 12.

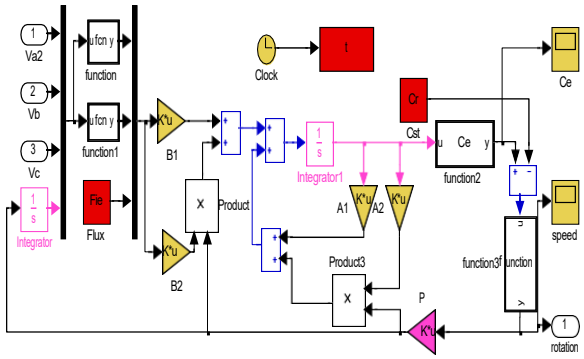

Figure 12. Block of permanent magnet synchronous motor.

To make a system more stable, it requires an energy management strategy between its different components which is shown in the following part.

4. PROPOSED CONTROL SYSTEM STRATEGY

The question is: How the wind turbine and battery can be combined with each other for the operation of the electric vehicle (EV_{WTG}). This is a difficult problem that we will try to solve in this article. The aim of energy management is to perfect vehicle operation (EV) whatever the changing climatic condition (V_m). Optimal energy management needs many requirements, which the main two factors are, [22]:

- ✓ Satisfaction of energy demand.
- ✓ Recovery of breaking energy as much as possible.

Among the types of energy management strategies, the method is based on fuzzy logic that occupies a prominent place due to its independence from a complete mathematical model and an evaluation procedure. The based FLC offers a remarkably simple way to draw definitive conclusions from vague, ambiguous, or imprecise information. Unlike classical logic, which requires a deep understanding of the system. Figure 13 shows specific components characteristic of an FLC [23].

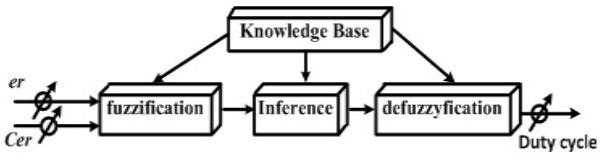

Figure 13. Fuzzy inference system

Based on the above aims, the Electric Vehicle (EV_{WTG}) was modelled and controlled to meet engine demand and charge the batteries. We designed the proposed (EV_{WTG}) in MATLAB.

The following figure is a block diagram of the different modes of the system manager (see Figure 14).

Depending on the measured data of wind speed (*Vm*) and state of charge of the battery we distinguish four main complementary modes of operation:

- **Mode 1:** The wind speed ($Vm \leq 3.4$ m/s) the wind turbine is out of service, and electric vehicle (EV_{WTG}), feeding directly from the battery only.
- **Mode 2:** The wind speed ($3.4\text{m/s} < Vm \leq 12.5\text{m/s}$) electric vehicle, fed directly from the wind turbine (WTG) only.
- **Mode 3:** when the wind speed ($12.5\text{ m/s} < Vm \leq 16\text{ m/s}$), the electric vehicle is fed by the WTG, and the excess energy is stored in a battery.
- **Mode 4:** When the wind is strong more than 16m/s, the WTG stops working by means of the PITCH control that works to protect the blade from breaking and protect the turbine generator WTG from burning, Thus giving command to the battery in order to feed the electric motor of the vehicle.

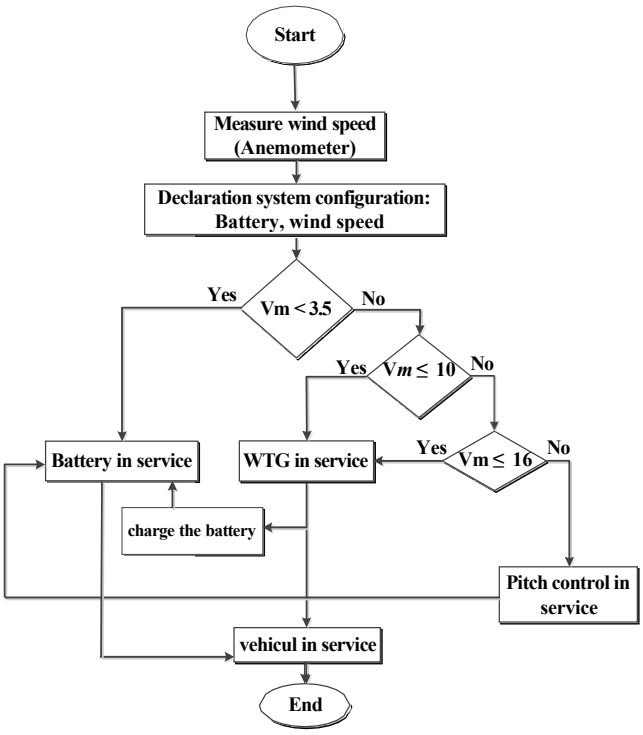

Figure 14. Block diagram of the implemented energy management system

After the proposal section the system energy management strategy we get the results in section 5.

5. RESULTS AND DISCUSSIONS

To carry out this study, we carried out energy modelling and control of EV_{WTG} components, the main elements of which are: wind power, battery (LEAD-ACID), engine, energy management unit. The simulation results were obtained by developing a detailed model using MATLAB (Figure 15).

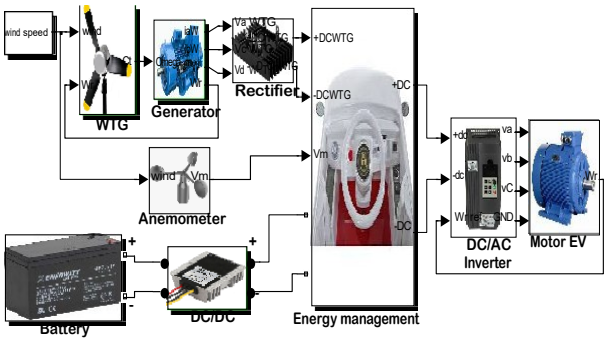

Figure 15. Structure of proposed hybrid system (EV$_{WTG}$– Battery)

Figure 16 are the voltage generated by the wind turbine which we notice that the voltage produced are stable and fixed (around 48V) except for some disturbances at the start due to estimated transient conditions 0.01s.

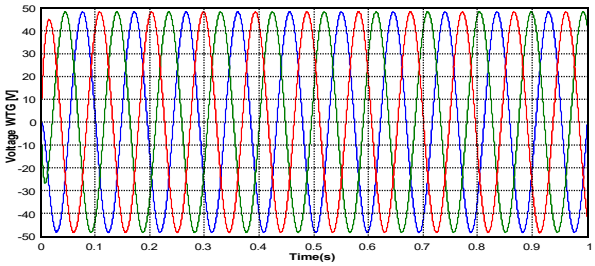

Figure 16. Voltage generated by WTG.

Figure 17 shows the DC voltage produced by the rectifier which converts the alternating energy connected to a wind turbine as shown in Figure 15.

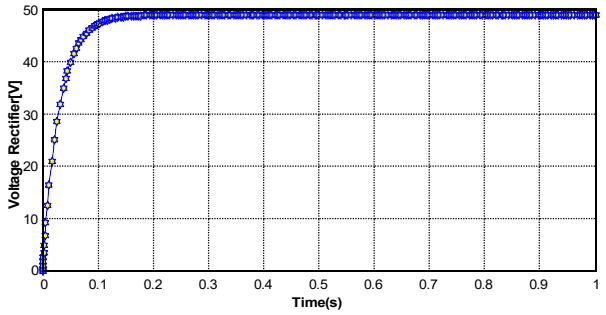

Figure 17. DC voltage generated by the rectifier

In Figure 18, we have presented the variation of bidirectional converter voltage (DC / DC) where we have noticed an increase in voltage from (26V) produced by the battery to (48V), to supply the inverter at a nominal DC voltage.

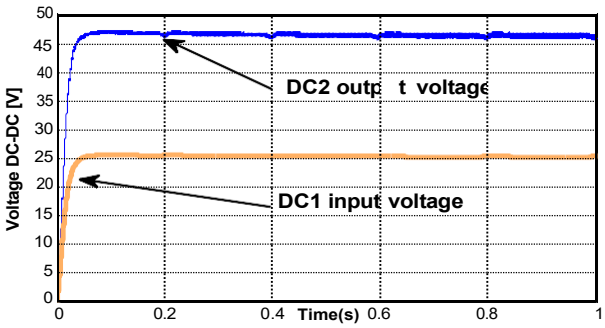

Figure 18. Voltage of bidirectional DC-DC converter.

Figures 19, represent the voltage of three phases generated by the inverter, which adapts the voltage to (220V) and the frequency f = 50Hz to power the electric motor.

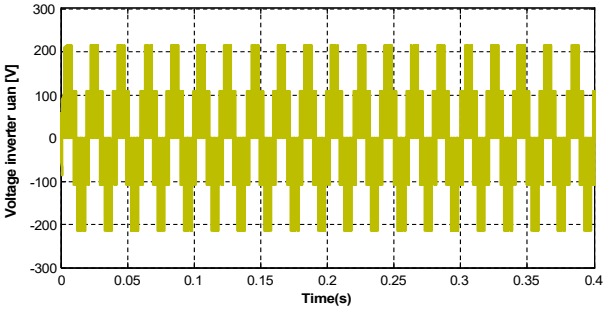

Figure 19. Output voltage phase (a) of the DC/AC inverter

According to figure 20, we notice that the values of the resulting inverter currents are stable (I= 4.8A) with slight changes over time.

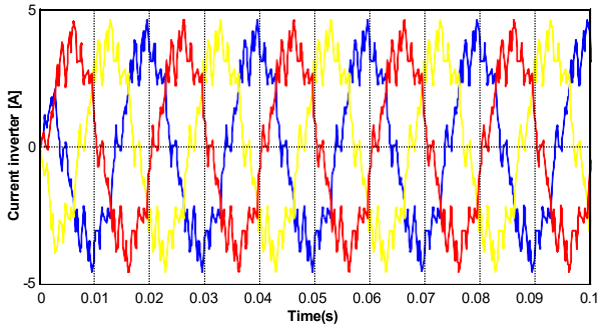

Figure 20. Variation of the three inverter output currents

Figure 21 shows wind speed and estimated vehicle speed P207 (EV). In this case, we notice a low wind speed (11 km/h), so the synchronous motor is powered by the battery, because the wind turbine is at rest, according to the energy management strategy mentioned above. Note that the vehicle speed (EV) reaches 21 (km/h)

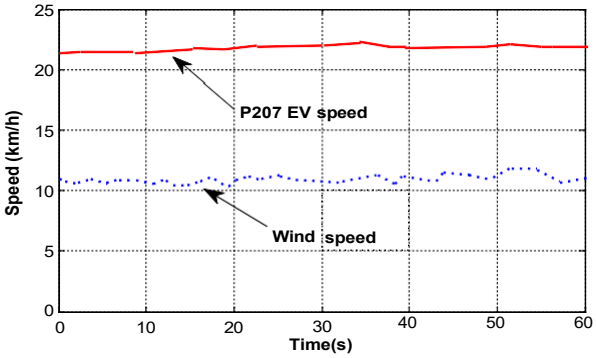

Figure 21. Vehicle speed generated by battery.

We notice in Figure 22 that the speed of the car increased when its speed reached 42 (km/h) due to the increase in wind speed which reached 18 (km/h), which makes the turbine in a working order.

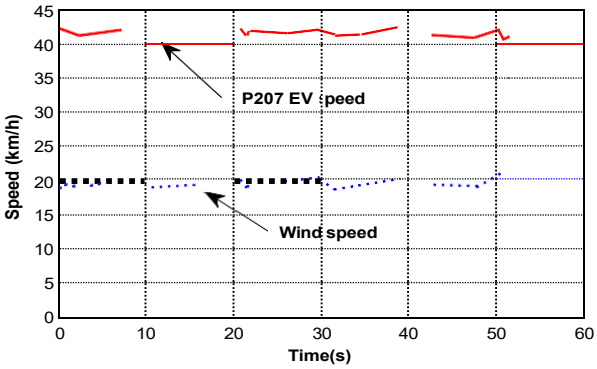

Figure 22. Vehicle speed generated by wind power (WTG)

In Figure 23, we notice that the vehicle speed values are higher (51 km/h) compared to the wind speed 28 (km/h). Thanks to the implication of the gearbox its speed will be increased.

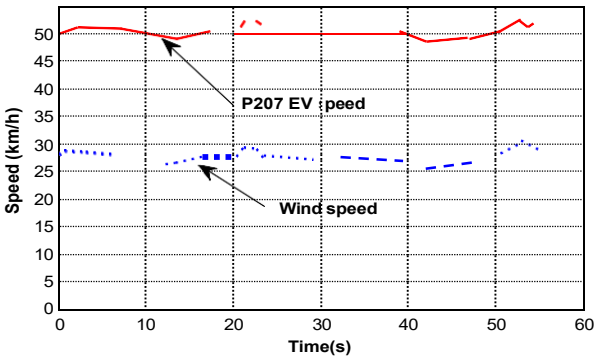

Figure 23. Vehicle speed generated by wind speed (WTG) at 28 (km/h)

In Figure 24, we note that a car has reached a very satisfactory speed 80 (km/h) compared to the wind speed 40 (km/h) because this speed has remained almost constant due to the control of wind speed regulation (WTG) if an increase in wind speed.

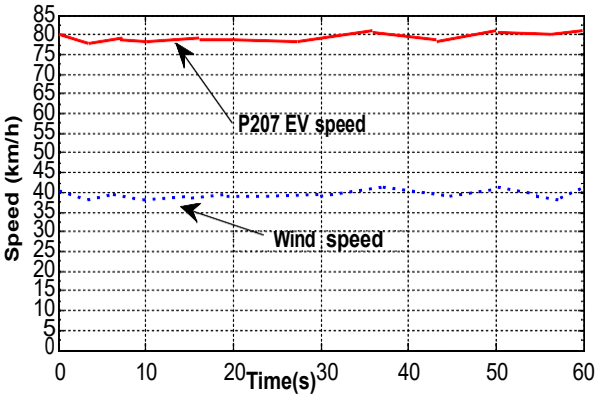

Figure 24. Vehicle speed generated by wind speed (WTG) at 40 (km/h).

6. CONCLUSIONS

In light of previous studies conducted by the authors in the publication of their researches and articles on solar electric cars, we have focused in this article on creating a new idea as a study and working prototype an electric vehicle that depends on wind turbines independently and self-powered (induced wind).While keeping the battery as a backup generator to move the electric vehicle at the necessary speed for the automatic operation of wind turbines. Thanks to the bidirectional DC-DC converter. The electric vehicle batteries can absorb excess electricity when the production exceeds demand and save energy when the production is below the demand .Thus according to the energy management strategy and the operation applied to this proposed system. The advantage of using an electric vehicle powered by wind turbines installed on its roof is the sufficient production of clean electric energy without the use of fossil fuels, as the case with cars today. In this article, we have conducted a preliminary experimental study by applying and watching amounts of electrical energy giving very positive and satisfying results. This work is still in progress to give the research better yields as well as control and precision at the level of our university laboratory.

7. ACKNOWLEDGEMENTS

The authors thank Pr. D.M for his aid help rewrite this paper in English, without forgetting the anonymous reviewers for their constructive suggestions in the construction of this paper.

8. REFERENCES

[1] Zhili, D., Boqiang, L., & Chunxu, G. (2019). Development path of electric vehicles in China under environmental and energy security constraints. *Resources, Conservation and Recycling*, *143*, 17-26.

[2] Nunes, P., & Brito, M. C. (2017). Displacing natural gas with electric vehicles for grid stabilization. *Energy*, *141*, 87-96.

[3] Seddig, K., Jochem, P., & Fichtner, W. (2017). Integrating renewable energy sources by electric vehicle fleets under uncertainty. *Energy*, *141*, 2145-2153.

[4] Ciupăgeanu, D. A., Lăzăroiu, G., Berbece, V., Tîrşu, M., & Galbură, V. (2018, May). Modelling and control of a low power wind turbine. In *2018 International Conference on Development and Application Systems (DAS)* (pp. 26-30). IEEE.

[5] Marino, R., Scalzi, S., & Verrelli, C. M. (2012, October). Speed and traction control in electric vehicles with induction motors. In *2012 Electrical Systems for Aircraft, Railway and Ship Propulsion* (pp. 1-6). IEEE.

[6] Gasbaoui, B., Chaker, A., Laoufi, A., Allaoua, B., & Nasri, A. (2011). The efficiency of direct torque control for electric vehicle behavior improvement. *Serbian Journal of Electrical Engineering*, *8*(2), 127-146.

[7] Ghezouani, A., Gasbaoui, B., Nair, N., Abdelkhalek, O., & Ghouili, J. (2018). Comparative study of pi and fuzzy logic based speed controllers of an ev with four in-wheel induction motors drive. *Journal of Automation Mobile Robotics and Intelligent Systems*,*12*.

[8] Ren, H., Zhang, X., Kang, S., & Liang, S. (2019). Actuator disc approach of wind turbine wake simulation considering balance of turbulence kinetic energy. *Energies*, *12*(1), 16.

[9] Yassin, H. M., Hanafy, H. H., & Hallouda, M. M. (2015, March). Low voltage ride-through technique for pmsg wind turbine systems using interval type-2 fuzzy logic control. In *2015 IEEE International Conference on Industrial Technology (ICIT)* (pp. 1065-1070). IEEE.

[10] Mousa, H. H., Youssef, A. R., & Mohamed, E. E. (2019). Variable step size P&O MPPT algorithm for optimal power extraction of multi-phase PMSG based wind generation system. *International Journal of Electrical Power & Energy Systems*, *108*, 218-231.

[11] Bossoufi, B., Karim, M., Lagrioui, A., Taoussi, M., & ElHafyani, M. L. (2014). Backstepping control of DFIG generators for wide-range variable-speed wind turbines. *International Journal of Automation and Control*, *8*(2), 122-140.

[12] Nasser, H. (2014). Vehicle Dynamics Conversion into Power (Dynapower). *AASRI Procedia*, *7*, 32-37.

[13] Alloui, H., Becherif, M., & Marouani, K. (2013, June). Modelling and frequency separation energy management of fuel cell-battery hybrid sources system for hybrid electric vehicle. In *21st Mediterranean Conference on Control and Automation* (pp. 646-651). IEEE.

[14] Dufo-López, R., Lujano-Rojas, J. M., & Bernal-Agustín, J. L. (2014). Comparison of different lead–acid battery lifetime prediction models for use in simulation of stand-alone photovoltaic systems. *Applied Energy*, *115*, 242-253.

[15] Xiao, H., & Xie, S. (2008). A ZVS bidirectional DC–DC converter with phase-shift plus PWM control scheme. *IEEE transactions on power Electronics*, *23*(2), 813-823.

[16] Kamal, T., Hassan, S. Z., Li, H., Mumtaz, S., & Khan, L. (2016, January). Energy management and control of grid-connected wind/fuel cell/battery Hybrid Renewable Energy System. In *2016 International Conference on Intelligent Systems Engineering (ICISE)* (pp. 161-166). IEEE.

[17] Iqbal, M. M., & Islam, K. (2017). Design and simulation of a PV System with battery storage using bidirectional DC-DC converter using Matlab Simulink. *International Journal of scientific & Technology research*, *6*(07).

[18] Chiu, H. J., & Lin, L. W. (2006). A bidirectional DC–DC converter for fuel cell electric vehicle driving system. *IEEE Transactions on Power Electronics*, *21*(4), 950-958.

[19] Hartani, K., Miloud, Y., & Miloudi, A. (2010). Improved direct torque control of permanent magnet synchronous electrical vehicle motor with proportional-integral resistance estimator. *Journal of Electrical Engineering and Technology*, *5*(3), 451-461.

[20] Athavale, A., Sasaki, K., Gagas, B. S., Kato, T., & Lorenz, R. D. (2017). Variable flux permanent magnet synchronous machine (VF-PMSM) design methodologies to meet electric vehicle traction requirements with reduced losses. *IEEE Transactions on Industry Applications*, *53*(5), 4318-4326.

[21] Ali, S. Q., Mascarella, D., Joos, G., & Tan, L. (2018). Torque cancelation of integrated battery charger based on six-phase permanent magnet synchronous motor drives for electric vehicles. *IEEE transactions on transportation electrification*, *4*(2), 344-354.

[22] Eren, Y., Erdinc, O., Gorgun, H., Uzunoglu, M., & Vural, B. (2009). A fuzzy logic based supervisory controller for an FC/UC hybrid vehicular power system. *international journal of hydrogen energy*, *34*(20), 8681-8694.

[23] Ksentini, A., & Azzag, E. B. (2019). Improvement and optimization of an autonomous photovoltaic pumping system. *International Journal of Numerical Modelling: Electronic Networks, Devices and Fields*, *32*(3), e2547.