sciendo

LATVIAN JOURNAL OF PHYSICS
AND TECHNICAL SCIENCES
2024, N 4

DOI: 10.2478/lpts-2024-0027

CHARACTERISATION OF HYBRID PHOTODETECTOR SIGNALS FOR SATELLITE LASER RANGING APPLICATION

K. Salmins*, J. Kaulins

Institute of Astronomy, University of Latvia,
3 Jelgavas Str., Riga, LV-1004, LATVIA
*e-mail: kalvis.salmins@lu.lv

The hybrid photodetector (HPD) is a photomultiplier tube combined with the semiconductor device within the vacuum. The photoelectrons emitted from the photocathode directly hit the semiconductor enabling efficient electron multiplication with low noise and symmetric output pulse. These properties make a hybrid photodetector a good solution for photon-counting applications. At the Satellite Laser Ranging Station of the Institute of Astronomy at the University of Latvia, the hybrid photodetector characteristics were evaluated for SLR applications, including multiphoton mode and time-walk compensation.

Keywords: *Photodetectors, satellite laser ranging, time walk.*

1. INTRODUCTION

Satellite Laser Ranging (SLR) is a space geodesy technique that measures distances to the satellites by sending short laser pulses to the satellite, detecting reflected photons, and measuring the round-trip time with extremely high accuracy. SLR uses several different types of detector that capture the reflected light from the target. The basic criteria for the detector for SLR are a single-photon sensitivity, picosecond level timing resolution, high quantum efficiency at applicable wavelength, low dark noise, and time-walk characteristics. Time walk is an amplitude and signal rise time-dependent shift in the timing measurements. SLR typically uses a 532 nm laser wavelength, but for certain tasks, particularly for the space debris ranging, a wavelength of 1064 nm is also used. The most widely used detectors are Photomultiplier Tube (PMT), Multi-Channel Plates (MCP), and Compensated Single Photon Avalanche Diode (CSPAD). The main difference between CSPAD and Single Photon Avalanche Diode (SPAD) is

a time-walk compensation electronics built into the CSPAD. Recently, a superconducting nanowire (SNSPD) operating at wavelength of 1064 nm has also been tested. Another potential detector type is a silicon photomultiplier (SiPM).

Each of these detectors has its own advantages and disadvantages in SLR applications. PMT typically has a large-area photocathode, which makes it easy to install and align, and cause relatively low dark noise. This type of detector has been known for almost 100 years, the technologies involved are well researched and widely used in different applications, including SLR. It is characterised by a relatively small quantum efficiency of 10–35 % depending on the photocathode type and a typically lower timing resolution at the single-photon level than other detector types now used in SLR. Higher quantum efficiency in the case of PMT also results in a lower timing resolution mostly due to the photocathode thickness [1].

CSPAD type detectors now are widely used in SLR in the single-photon detection mode. Detectors of this type have a better time resolution, less than 100 ps, and quantum efficiency, reaching up to 60 %. CSPAD detectors have a built-in diode cooling down to -60 °C to reduce noise and time-walk compensating electronics (time walk is also a function of temperature). The small size of the sensitive area (0.05mm–0.2mm) complicates the alignment of the system and requires high accuracy and stability for satellite pointing and tracking.

Superconducting nanowire detectors (SNSPDs) have even higher quantum efficiency, in some cases approaching 100 %, and have very low dark noise, but the sensing element dimensions are similar to SPADs or smaller and detector operation requires cryogenic temperatures, which complicates setup. Therefore, their use in SLRs currently is limited at the experimental level.

Multi-Channel Plate (MCP), which is a variation of the PMT, offers high QE, has a timing resolution and quantum efficiency comparable to CSPAD. Due to it is design, it is hard to detect if the system operates in a single- or multiphoton mode. This knowledge is important for the signal processing and later analysis.

In this paper, we will review some of the characteristics of hybrid photodetector (HPD). The hybrid photodetector combines the characteristics of PMT and SPAD. It has applications in nuclear physics experiments, fluorescence spectroscopy, fluorescence microscopy, optical tomography, and photon counting applications with high time-resolution requirements. However, to the best of our knowledge, so far it has not been used in regular SLR operations, although it was indicated as a prospective SLR detector as early as 2014 [2]. While HPD performance in a single or few-photon mode is known, its performance and timing properties, when the signal varies from single photon to mulitphoton reaching hundreds of photon per pulse, as in the case of SLR station in Riga, are unknown.

In the hybrid detector, the output signal is formed in three stages. First, photon-to-electron conversion takes place, which generally corresponds to the classical photocathode (d = 3–6 mm) with an operating voltage of -8 kV. Electrons accelerate in a vacuum over a distance of a few millimetres and their number multiplies when the electron hits the semiconductor surface (amplification approx. 1500). After that, these electrons reach a p-n junction operated in avalanche mode (UR = +390V), where another 80-fold amplification is obtained. The key difference from the PMT is that there are no multiple dynodes. As a result, HPD has a good amplitude resolution but

a low output signal amplitude. The market offers ready-made modules that combine the photosensor itself with a cooler, a high-speed preamplifier and a power supply unit [3]–[5]. All these modules use the family of HPD modules from Hamamatsu [6].

The small spatial dimension of the physical processes taking place in the sensor allows for obtaining a very short output signal, for some models the FWHM is less than 18 ps. The noise level depends on the photocathode type and size, ranging from less than 100 cps up to a few thousand cps. For our selected model, PicoQuant PMA-40 with GaAsP photocathode, measured dark count is less than 100 cps with trigger level set at -50 mV.

2. EXPERIMENTAL

The primary intended use of the HPD in our case was for the space debris laser ranging, but we also evaluated its eventual application in SLR where timing accuracy is paramount. Therefore, we decided to check whether the detector could also be used for the SLR needs, as there were no published data available, with particular interest in the detector time-walk characteristics and detector performance with multi-photon signals.

The existing detector unit of laser ranging telescope LS-105 was modified to accommodate the second detector. New design allows working with both detectors – PMT, Hamamatsu H11901 and HPD PicoQuant PMA-40. Detector unit layout is demonstrated in Fig. 1. The detector unit makes it easy to switch between both detectors as needed. All optomechanical components of the detector, including switching detector channels, can be controlled remotely from the operator's computer. The main parameters of both detectors used, as provided by the manufacturers, are presented in Table 1.

Table 1. Detector Parameters

Parameter	**PMT Hamamatsu H11901-20**	**HPD PicoQuant PMA-40 [5]**
QE_{max} at 532 nm, %	18	44
Spectral band at QE>10 %, nm	300–850	300–720
Size of the sensitive area, mm	8	3
Dark count, Hz	600–1000	<80
$F_{count., max}$, MHz	≈200	80 (10 recommended)
Rise time, ps	570	400

The focal diaphragm F defines the detector field of view and is positioned in the focal plane of the main optical system.

To evaluate signal parameters, we used an internal calibration chain, shown in Fig. 2. Internal calibration uses variable attenuator to reduce laser pulse to the strength comparable with the returned signal from the satellite allowing one to simulate signals from single photoelectron to hundreds of photoelectrons. The attenuated laser pulse is redirected via optical fibre into the receiver channel. We use this setup to make an assessment of the HPD parameters. The laser is Ekspla SL-312. For the SLR operations and detector testing laser pulse energy is set to 100 mJ at a wavelength of 532 nm, pulse length FWHM is 130 ps.

The outgoing laser pulse is split into two parts by a dielectric mirror, directing the main part of the signal to the main telescope optics and, accordingly, to the satellite or corner cube retroreflector if the external calibration is performed. External calibration takes place by installing a retroreflector at the exit of the telescope tube or on one of the external target piers near the telescope.

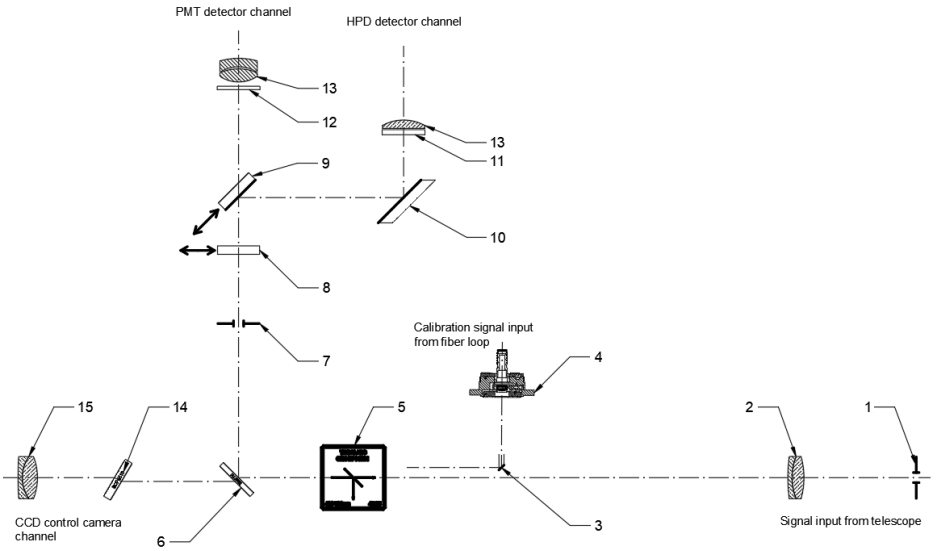

Fig. 1. Multi-channel detector unit using HPD and PMT: an optical scheme.

1 – input (focal) diaphragm, 2 – collimator lens, 3 – reflective prism, 4 – fibre port, 5 – pellicle beamsplitter (removable, for adjustment only), 6 –540 nm longpass dichroic mirror, 7 – diaphragm-attenuator, 8 – 0.15 nm ultra-narrow band interference filter (optional), 9 – movable diagonal mirror for channel switching, 10 – diagonal mirror, 11, 12 – 2 nm narrow band interference filters, 13 – detector lenses, 14 – compensator plate, 15 – alignment control camera lens.

The signal coming from the laser falls on the Nd:YAG laser line dielectric mirror for the 532 nm line of the second harmonic of the Nd-YAG laser. Most of the signal enters the telescope, which redirects it to the target. Approximately 0.3–0.4 % of the light passes through the dielectric mirror and forms the measurement start and calibration signals. The signal is further attenuated by the neutral filter before entering the beam splitter. The start signal is generated by a high-speed photodiode, the signal of which is inverted to suit the input of the constant fraction discriminator (CFD). From the CFD, the signal is fed to the ET input, which is also the real start signal to start the time interval measurement. In internal calibration mode, shutter 1 is closed and shutter 2 is open. The straight part of the beam passes through an adjustable optical attenuator (see Fig. 2), which consists of rotating linear polarizers.

Behind them, the beam enters the single mode optical fibre with a precisely known length of 25.008 m, the other end of which is located in the detector block (see Fig. 1). The calibration mode is necessary to determine the system delay times and to obtain the signal amplitude correction curve by changing the optical attenuation. This setup can also be used to evaluate detector and measurement electronics.

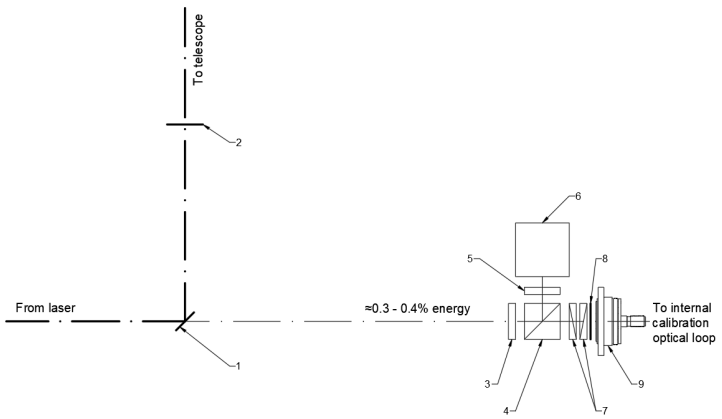

Fig. 2. Variable attenuator for internal calibration.

1 – Md:YAG laser line mirror 532 nm, 2 – shutter 1, 3 and 5 – neutral filters, 4 – beamsplitter, 6 – start signal diode, 7 – the pair of polarizers (variable attenuator), 8 – shutter 2, 9 – fibre port.

The HPD module contains a built-in preamplifier, but the PMT uses a high-speed external Hamamatsu C5658 preamplifier. The detector lens focuses light on the photocathodes to minimize the transit time spread (TTS) influence. The preamplifiers are connected to the signal processing devices by low-loss delay cables to compensate event timer RTS 2006 dead-time, which is 90 ns. The time selector is located on the input of the time selector/amplitude-to-interval-converter (TS/ATIC) [7] input of the signal pre-processing unit and is driven by the gate signal from the event timer RTS 2006 [8]. TS/ATIC operates as a leading edge discriminator and converts each incoming pulse to the pair of NIM logic signals. The first pulse gives time interval measurement, the second pulse serves as time interval measurement. The time interval between the TS/ATIC output pulses is directly proportional to the amplitude of the signal. This time interval serves as information for signal amplitude compensation using the calibration curve to compensate for detector time walk. Time-walk compensation is performed in the post-processing software.

The block diagram of the hardware is shown in Fig. 3. The diagram also shows the places where signal parameters are measured. For this purpose, a Tektronix DPO7254 oscillograph with a bandwidth of 2.5 GHz was used.

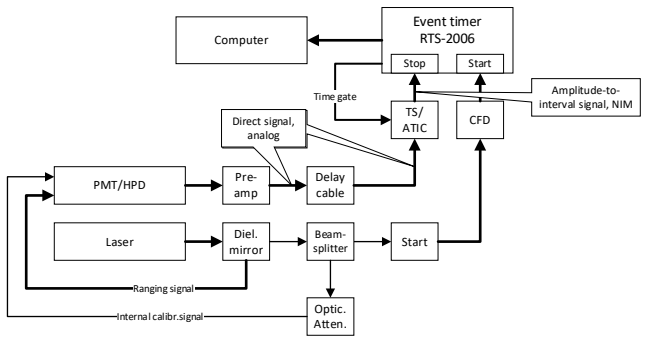

Fig. 3. Ranging and internal calibration scheme.

TS/ATIC – Time Selector and Amplitude – Time Converter. Note: PMT and HPD each have a separate individually tuned TS/ATIC unit.

2.1. Time-Walk Measurements

Time-walk measurements for the HPD are shown in Fig. 4. For the comparison, the time-walk chart for the PMT is shown in Fig. 5. The measurements are obtained by periodically changing laser pulse strength with attenuator in the calibration loop in the full range from the minimal to the maximal available value. The signal waveforms were checked with the Tektronix DPO 7254C at different amplitude values to check when the waveform becomes distorted and unusable for the measurement of the signal amplitude with TS/ATIC. Single photon mode was controlled by monitoring a return rate. When the return rate is 10 % or less, we assume that we have a single-photon mode. Independently it was verified by checking the signal waveform with an oscilloscope. Each time-walk measurement set contains 6000 data points. Each data point includes measurement epoch, measured distance in picoseconds, and amplitude expressed in nanoseconds. Experiments show that the HPD dynamic range is approximately 20 % smaller than that of PMT.

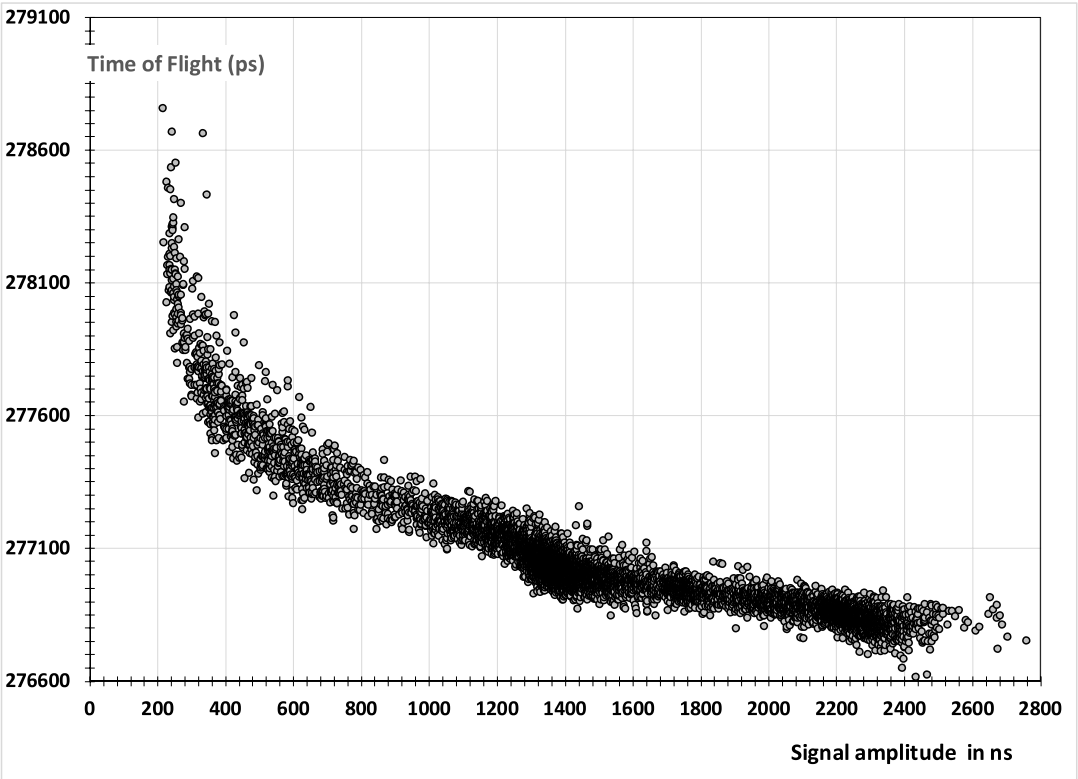

Fig. 4. HPD time walk. The x-axis is the signal amplitude converted to the time interval in ns, and the Y-axis denotes the calibration loop total length in ps.

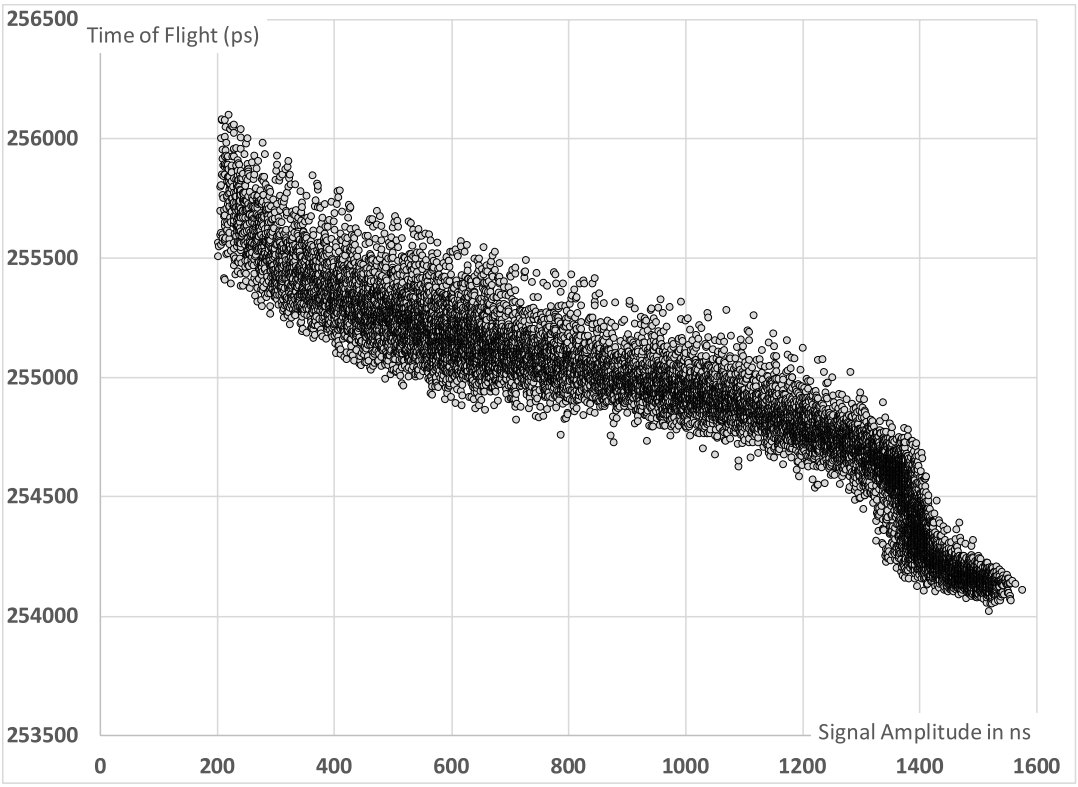

Fig. 5. PMT time walk. The x-axis is the signal amplitude converted to the time interval in ns, and the Y-axis denotes the calibration loop total length in ps.

The difference in distance measurements between HPD and PMT is caused by the geometric difference in optical path length between the HPD and PMT locations in the detector unit. At a fixed amplitude, charts indicate measurement uncertainty, which is a sum from the detector TTS, laser pulse width, and summary measurement error, including all electronics. The correction uncertainty for HPD is smaller reflecting a smaller TTS value.

3. CONCLUSIONS

In the single-photon operating mode, a good correspondence of the pulse shape and amplitude was observed with that found in the detector manufacturer's documentation. In the single to a few photon mode amplitude changes are proportional to the number of photons and maintaining this proportionality up to approximately 5–6 photons per pulse. When the pulse amplitude reaches 1200 mV–1250 mV, a signal becomes unusable for the precise amplitude measurements and time-walk compensation. It should be noted that the signal still can be used to measure distances, but the result will be with a lower accuracy due to uncertainties in the amplitude measurements induced

by the signal waveform distortion.

HPD seems to be a viable alternative in SLR applications to the already existing types of photodetectors, with the following remarks. For daylight tracking, an alkali type with a lower quantum efficiency should be chosen to improve a life time and timing resolution. 10 %–15 % QE should be sufficient for the cooperative target tracking. The alkali photocathode types also offer a better time resolution TTS <50s compared to 120 ps for the high sensitivity GaAsP photocathode used in our experiments. We measured the time-walk characteristics of the HPD detector and found the usable amplitude interval. The dynamic range is lower than PMT due to higher QE but this raises the issue only with a very strong multiphoton. To achieve the best accuracy, we have to discard multiphoton signals outside the usable range. Experiments show that the time-walk compensation algorithm using leading edge discriminator works well with HPD using the same approach as PMT in actual SLR experiments [9]. For the space debris laser ranging HPD detector version with the high QE, where the timing accuracy is less demanding, HPD with its larger sensitive area and low noise can be considered a cost effective alternative to CSPAD or MCP detector types. To make time-walk compensation measurements more accurate, especially in one to a few photon mode, more precise optical laser pulse attenuation control is required and existing setup has to be modified to make optical attenuation more precise and repeatable.

ACKNOWLEDGEMENTS

The study has been supported by the ERDF funded project "Technology for High-Precision Time-Amplitude Analysis of Event Flow" (TIME AMP) No. 1.1.1.1/20/A/076.

REFERENCES

1. Taguchi, T., & Nakamura, M. (2013). New Gated MCP-PMTs and their Performances in Comparison with Semiconductor Type Detectors for SLR Applications. *International Workshop on Laser Ranging, 3-Po28*. Available at https://ilrs.gsfc.nasa.gov/lw18/docs/papers/Posters/13-Po28-Taguchi.pdf
2. Sadovnikov, M. A., & Shargorodskiy, V. D. (2014). The New Generation SLR Station for Time Transfer with the Subnanosecond Accuracy and Laser Ranging with the Submillimeter Accuracy in the Daytime and at Night. 19th International Workshop on Laser Ranging 2014 Annapolis, USA, Annapolis, USA. Available at https://cddis.nasa.gov/lw19/docs/2014/Presentations/3025_Sadovnikov_presentation.pdf
3. Edinburgh Instruments. (n.d.). *High-Speed Hybrid Photodetector (HS-HPD).* Available at https://www.edinst.com/us/high-speed-hybrid-photodetector-hs-hpd/
4. Becker & Hickl GmbH (n.d.). *Hybrid Single-Photon Detectors*. Available at https://www.becker-hickl.com/products/hybrid-photo-detectors/
5. PicoQuant. (n.d.). *PMA Hybrid Series Hybrid Photomultiplier Detector Assembly.* Available at https://www.picoquant.com/products/category/photon-counting-detectors/pma-hybrid-series-hybrid-photomultiplier-detector-assembly#documents

6. Hamamatsu Photonics. (n.d.). *Hybrid Photo Detectors (HPDs)*. Available at https://www.hamamatsu.com/eu/en/product/optical-sensors/pmt/hpd.html
7. Bespal'ko, V., Burak, I., & Salmins, K. (2019). Estimating the Precision of a Leading-Edge Discriminator with Amplitude Correction. *Instruments and Experimental Techniques, 62* (6), 788–793. https://doi.org/10.1134/S0020441219060022
8. Artyukh, Y., Bespal'ko, V., Lapushka, K., & Rybakov, A. (2006). Event timing system for Riga SLR station. In *Proceedings of the 15th International Workshop on Laser Ranging*. 16–20 October 2006, Canberra, Australia. http://edi.lv/media/uploads/UserFiles/event_timing/Publication/EventTimingSystem4Riga.pd
9. Salmins, K., del Pino, J., & Kaulins, J. (2023). Hybrid Photodetector as Sensor for SLR: First Results. In *23rd International Workshop on Laser Ranging*, held virtually, 16 October 2023. https://ilrs.gsfc.nasa.gov/lw23/Program/index.html#sess02