28-37 B&H Electrical Engineering Volume 14 January/December 2020
sciendo
DOI: 10.2478/bhee-2020-0010

Review scientific paper/Pregledni naučni rad

OVERVIEW OF ISLANDING DETECTION METHODS OF DISTRIBUTED SOURCES IN DISTRIBUTION GRID

PREGLED METODA PREPOZNAVANJA OTOČNOG RADA DISTRIBUIRANIH IZVORA U DISTRIBUCIJSKOJ MREŽI

Dragan Mlakić[1]

Abstract: Increasing number of distribution sources has many benefits: system reliability, energy quality in some cases, voltage stability, power security, etc. Adding advantages include potential disadvantages and risks for the network and its users, in this case consumers and other electricity sources. The disadvantages may be, but are not limited to increased levels of short circuit currents, deliberate disconnection from the distribution network, poor energy quality in some cases, and risk of islanding. Islanding protection has become one of the main requirements when a new distribution source needs to be installed in the network, which requires islanding protection as one of the standard distribution source protections. Many researchers have suggested some solutions to the problem of islanding and, based on previous research, four main parts have been formed: communication-based protection, passive, active, and hybrid methods of protection. This paper reviews current applicable methods in industry and the real sector.

Keywords: Islanding detection, Distribution grid, Power Protection, Renewable Energy Sources

Sažetak: Povećani broj distribuiranih izvora ima svoje prednosti: pouzdanost sustava, kvaliteta električne energije u nekim slučajevima, naponska stabilnost, sigurnost napajanja, itd. Povećana korisnost uključuje i potencijalne opasnosti i rizike za distribucijsku mrežu i njene korisnike, u ovom slučaju potrošače i druge izvore električne energije. Opasnosti i rizici mogu biti, ali nisu ograničeni na, povećanu razinu struje kratkog spoja, neželjena iskapčanja sa distribucijske mreže, slaba kvaliteta električne energije u nekim slučajevima, te rizik od otočnog rada. Zaštita od otočnog rada je postala jedan od bitnih zahtjeva kada se novi distribuirani izvor priključuje u distribucijsku mrežu. Mnogi istraživači su predložili određena rješenja ovog problema i tako su se formirala tri glavna skupa metoda prepoznavanja otočnog rada. Ovaj rad pravi pregled dostupnih primjenjivih metoda u industriji i realnom sektoru.

Ključne riječi: Prepoznavanje otočnog rada, distribucijska mreža, zaštita energetskih postrojenja, obnovljivi izvori energije

INTRODUCTION

The classical structure of a distribution system is passive in nature; it has always considered the flow of energy from more than one voltage level to a lower voltage level. Active distribution network is different from passive in terms of bidirectional power flow, production based on power electronics changers, high variety of fault levels, etc. The share of a distribution source as well as the placement of a distribution source has a significant impact on protection, operation, reliability and management of power system [1]. These issues need to be addressed critically before allowing the distribution source market to participate in the regular functioning of the existing power flow structure, with some additional benefits such as active reserve, interrupt loads, load in general, etc. Distribution island operation is defined as a situation in which a part of a utility system is powered by one or more distributor sources, while that particular system fragment is electrically isolated from the rest of the energy system, as shown in Figure 1 [2].

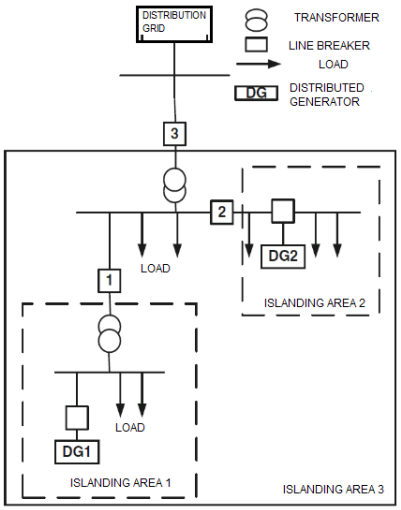

Figure 1: Concept of islanding in distribution network [2]

[1]JP Elektroprivreda HZ-HB d.d. Mostar, Bosnia nad Herzegovina
dragan.mlakic@ephzhb.ba
Paper submitted: October 2019 Paper accepted: December 2019

Opening switches 1, 2 and 3 formed island areas 1, 2 and 3. In the light of this, the paper gives an overview of Islanding Detection Method (IDM) available in the research literature, a manifestation of the transition of island discovery research strategies. The methods are broadly classified into classical and modern methods.

The appearance of islanding can be divided into involuntary and deliberate initiation. Unintentional initiation is a scenario in which an island emerges without prior knowledge of the utility or an independent energy producer. Disruption of the network in unintentional swelling occurs under the following conditions [3]:

1) a defect detected by the network security mechanism but not by security devices installed in the distribution source connected to the network,
2) equipment failure that causes the normal network to be turned off accidentally,
3) human error or abuse,
4) the act of nature.

The unintended consequences of unintentional islanding are clear and need not be specifically cited, illustrating the need to effectively identify effective integration of distribution sources into existing energy system topologies [4]. The topic of this paper does not cover the appearance of deliberate islanding of a distributive source.

Unfortunately, there is no specific test evaluation system for standardization of island operation. Some countries have based their standards only on one type of distribution source, and some on hybrid generation. IEEE 1547-2003, IEEE 929-2000, Korean VDE 0126-1-1 and UL 1741 are some of the international standards that independent energy producers and DSO companies must adhere to for effective island work [5]. Figure 2 shows a generic island exploration system in accordance with UL 1741 and IEEE 929 as well as IEEE 1547. Load within potential island work (local load) is intended to be a parallel RLC circuit because these load types represent the greatest difficulty in island detection. In particular, RLC loads that have a high quality factor are the most problematic element in detection because they have low inductances and / or high capacitance and / or high resistance. The resonant frequency is considered the same frequency of the main network. Mathematical load parameters can be specified as in (1) - (4) [2]. The worst-case scenario of an unintentional island event is when there is no power mismatch between the distribution source of the output and the load.

$$R = V^2 / P_{TERET} \tag{1}$$

$$L = V^2 / (2\pi f Q_f P_{TERET}) \tag{2}$$

$$C = Q_f P_{TERET} / (2\pi f V^2) \tag{3}$$

$$f = \frac{1}{2\pi\sqrt{\frac{L}{C}}} \tag{4}$$

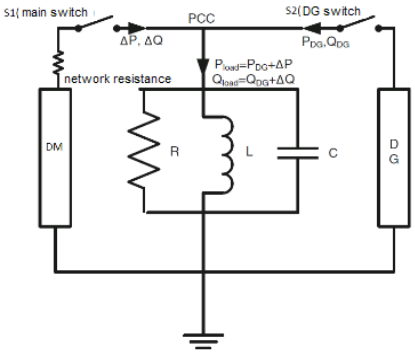

Figure 2: Generic system for testing the island drive according to the above mentioned standards [2]

Many criteria affect the properties of methods for detecting islanding. However, there are currently no techniques or techniques that meet all the criteria and can be applied to detect all types of island scenarios. Some criteria by which the methods are evaluated include non-detection zones, application costs, reliability / precision, operating time, effect on electricity quality, etc. Non-detection zones are an operational region in which island instances cannot be determined. Islanding Detection Methods (IDMs) efficiency increases with decreasing non-detection zone. Under normal conditions, voltage and frequency at the point of joint connection are governed by network conditions, but under island conditions, this depends on the mismatch of active and reactive power between distribution source production and load consumption. The limits of these power mismatches, where the IDM fails to detect the swelling, are the zones of non-detection [6] given in expressions (5) and (6). [2].

$$\left(\frac{V}{V_{max}}\right)^2 - 1 \le \frac{\Delta P}{P_{DC}} \le \left(\frac{V}{V_{min}}\right)^2 - 1 \tag{5}$$

$$Q_f\left(1-\left(\frac{f}{f_{min}}\right)^2\right) \le \frac{\Delta Q}{P_{DC}} \le Q_f\left(1-\left(\frac{f}{f_{max}}\right)^2\right) \tag{6}$$

However, the detection methods can be classified into three main categories that best distinguish them by the method of detecting the island operation of a distribution source:

- Passive methods,
- Active methods,
- Communication methods.

In addition, the classification of methods method is shown in the Figure 3.

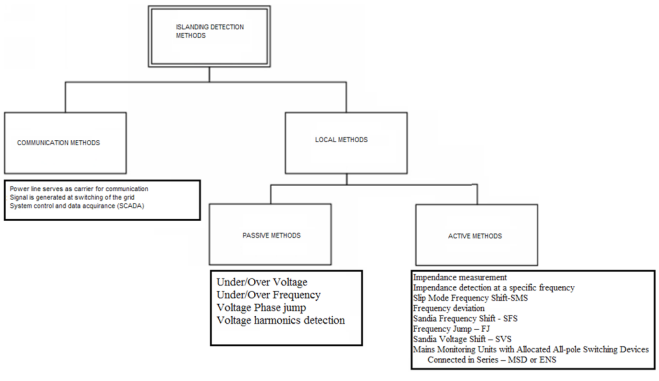

Figure 3: Overview of the classification of the basic methods of detection of islanding

1. PASSIVE METHODS

Passive methods are based on monitoring network variables with a dedicated algorithm located in or out of the distributed source field in a dedicated device. Most passive methods require major changes in frequency, voltage or phase angle, but also in some special harmonics or total harmonic distortion (THD). If the tracking algorithm detects large or sudden changes to these variables at the point of connection to the network, the inverter will shut down. Passive methods are most common:

- over / under voltage - monitors whether the line voltage exceeds the limits set by the relevant standards,
- over / under frequency - controls whether the network frequency exceeds the limits set by the relevant standards,
- rate of change of frequency (ROCOF) and voltage (ROCOV),
- phase monitoring - monitors the fast jumps of the mains phase,
- higher harmonic voltage - controls selectively (3rd, 5th, etc.) or total harmonic distortion (THD) of the mains voltage [7], [8].

Their non-detection zone (non-detection zone) does not cover situations where the load power is almost perfectly matched with the energy produced by the distribution source. In this case, variations in voltage, frequency, or phase angle are lower than specified in the standard because the network remains balanced even though the connection to the main network is lost. A combination of passive methods and multi-criteria decision-making can be used. In [9], the island operation detection algorithm uses passive methods including frequency and voltage monitoring and the most widely used methods such as frequency change rate (ROCOF), vector voltage offset (VPN), and unbalanced voltage. However, passive methods are generally considered as insufficient anti-island protection [10].

1.1. Under/over Voltage and Under/over Frequency

Consider the configuration shown in Figure 4, in which the energy flows and the node are indicated. The node is the point of joint connection (point of joint connection) between the DSO network and the PV inverter. When the switch is closed and the DSO is connected as an energy source, the real and reactive power of the $PFN + jQ_{FN}$ flows from the PV inverter to the node and the power of the $P_{load} + jQ_{load}$ flows from the node to the load. By summing the power flows in a node, we get information whether the active and reactive power entering the node is the same or not. If the PV exchanger operates with a unit power factor (i.e., the output current of the PV inverter is in phase with the voltage at the node), then $Q_{FN} = 0$ and $\Delta Q = Q_{load}$.

If $\Delta P\Delta \neq 0$, the amplitude will change and OVP / UVP can detect the change and prevent island operation. If $\Delta Q = 0$, the load voltage will indicate a sudden phase shift, and then the inverter control system will change the frequency of the output current of the inverter, and thus the voltage frequency in the node, to $\Delta Q = 0$ (ie, the resonant load frequency

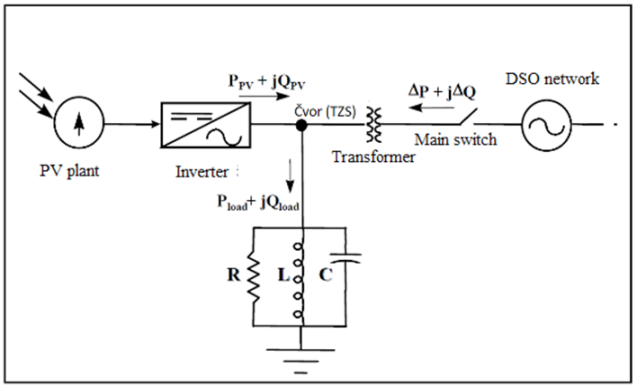

Figure 4: PV system and DSO network and configuration of components when connecting to a joint connection point [10]

is reached.) This frequency change can be detected by OFP / UFP.

1.2. Detection of Voltage Phase Jump

Phase-jump detection (PJD) involves monitoring the phase difference between the voltage of the inverter terminal and its output current for an abrupt "jump" [11], [12]. This is generally achieved by an analogue or digital locked loop (PLL) [13]. For current source changers, when the DSO network switches off, the voltage at the joint point is no longer firmly fixed from the power source. However, the output current of the PV inverter is fixed, since it still follows the waveform template provided by the PLL in the inverter. This is because the synchronization between PV and the voltage at the joint point occurs only at zero voltage crossings. Between zero crossings, the exchanger basically operates in open mode. Therefore, suddenly, the output current of the PV inverter becomes the reference phase. Since the frequency has not yet changed, the phase load angle must be the same as before the grid disconnected, and therefore the voltage at the joint junction point must go to a new phase shift as shown in Figure 5. At the next zero crossing. The resulting phase error between the "new" voltage and the output current of the exchanger can be used to detect island operation. If this phase error is greater than some limit value, the regulator may deactivate or deactivate the exchanger, considering that the distribution source is in island operation.

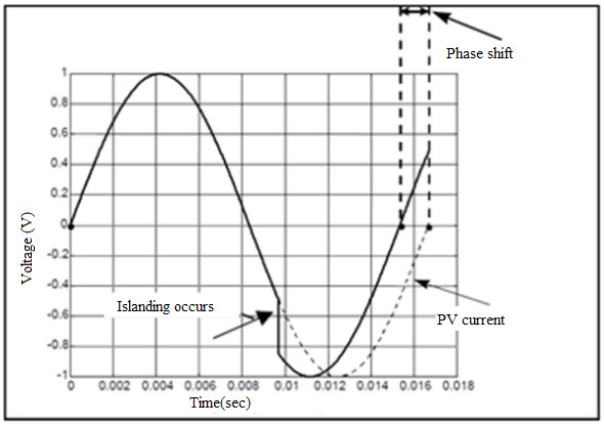

Figure 5: Schematic representation of the operation of the phase jump method [10]

The main strength of the phase jump method is its ease of implementation.

1.3. Voltage Harmonics Detection

A typical requirement for a network changer is to produce no more than 5% THD of its full rated current [14], [15]. When the DSO device switches off, the harmonic currents produced by the exchanger enter the load, which, as a rule, has much higher impedance than the mains effect. Harmonic currents interacting with higher load impedance will produce higher harmonics in voltage [16]. These voltage harmonics, or changes in the level of the voltage harmonics, are detected by the exchanger, which can then assume that the PV exchanger is alienated and interrupt operation. Another mechanism that can cause harmonics to increase is the voltage response of the transformer. There may also be non-linearities in the local load, such as rectifiers, that would similarly produce THD distortions. These nonlinearities usually produce significant third harmonics in general. Therefore, when used in practice, the third harmonic is often monitored.
It is clear that the chosen threshold is:

a) Higher than THD that can be expected in the grid voltage;
b) Lower than THD to be produced during island operation by either of the two mechanisms described above.

Suppose a PV exchanger produces 5% THD in its output current, the maximum allowable limit. For the resistive load supplied by this current, in the absence of a power source, the THD at the joint point will also be 5%. However, for RLC loads, it is possible for THD to be less than 5%, because a parallel RLC circuit may exhibit low resistance characteristics over which THD is. It is therefore clear that the THD threshold will need to be set below 5%

2. ACTIVE METHODS

Active methods have emerged as a necessity to minimize the non-detection zone of island method detection under conditions where energy generation is responsive to load. Typically, active methods impart a slight disturbance to the ODS network and decide, based on the network response, whether any island work has occurred. Disturbances in terms of the shift from normal values to the magnitude of the grid voltage, frequency or phase angle can be added by the distribution source and, in the case of a grid-related situation, these disturbances should be corrected by the grid through voltage and frequency control. Most active methods use positive feedback within the management of a distribution source — the controller attempts to change network variables such as frequency, phase, or voltage to execute:

- Frequency jump or phase jump - The distribution source intentionally changes the frequency or phase of the input current to change the frequency or phase of the voltage. If the frequency of the network follows the current of the exchanger, island operation has arisen and the PV exchanger should shut off [17], [18].
- Frequency hopping - similar to the methodology above.
- Sandia Frequency Shift - similar to the frequency jump but developed at Sandia National Laboratory [19].
- Voltage Feedback, Sandia Voltage Shift (a method developed by the Sandia Institute in Albuquerque, New Mexico) - attempts to resize the voltage at the point of joint junction. If the network monitors the changes generated by the distribution source, the voltage in the network will disappear from operating modes and therefore the exchanger will shut down [20].
- Injection of harmonics through a distributive source - Insertion of non-characteristic harmonics over a distributive source and network response is registered [21]. The method is also called impedance detection at a specific frequency. In [22] the imprinting of an uncharacteristic harmonic current is used to obtain the impedance of the network at that particular frequency. In [23], the current cone is periodically stamped at the point of joint connection by a network power exchanger. Based on the voltage response to this interference, the value of the network impedance is determined using a Fourier transform. The influence of the nonlinear load coupled close to the joint junction point is also considered and, as a consequence, an additional signal processing method is required to obtain accurate results. In [24], the phase angle signal used to generate a reference for a current regulator is slightly modified, in order to be able to estimate the network impedance based on the network response to the generated current. A high frequency signal (600 Hz) is imprinted at the zero crossing to determine the network impedance value. Active and reactive power oscillations are used in [25] to determine the network impedance values.

2.1. Impedance Measurement

When the PV exchanger appears as the current source for the utility, it works according to the following form:

$$I_{pV-inv} = i_{pV-inv} \sin\left(\omega_{pV} t + \Phi_{pV}\right) \tag{7}$$

Here output parameters can vary:

- PV amplitude,
- frequency ω of PV,
- PV phase.

In the method of output change, one of these parameters is continuously set variation [26], usually amplitude. When connected to the network, the magnitude of the voltage "perturbation" resulting from the "perturbation" of the current, which is also the "perturbation" in effect, depends on the nominal values of the resistance and power of the DSO network. It is a relationship:

$$\Delta V = \frac{\Delta P}{2}\sqrt{\frac{R}{p}} \tag{8}$$

If the DSO network is switched off, this change will cause a detectable change in voltage at the joint junction point, which can be used to prevent island operation [27]. As the inverter can be loaded so that the voltage of the island operation drops to the limit of the *OVP / UVP* windows of the protection connected to the network, the minimum displacement of current required to detect the island operation is equal to the full size of the *OVP/ UVP* window of operation.

2.2. Impedance Detection at a Specific Frequency

This method is a special case of the harmonic detection method. The difference, and the reason why this method is considered active rather than passive, is that this method deliberately inserts a harmonic current of a certain frequency into the node of the joint point via a PV inverter. One variant of the harmonic detection method relies on those current harmonics inadvertently pressed into the node of the joint junction point. When the DSO network is connected, if the impedance of the drive state is much lower than the load impedance at the harmonic frequency, then the higher harmonic current in the network does not create any unsuitable voltage.

After being separated by the DSO network, the harmonic current goes to the burden of part of the network in island work. The load then generates a harmonic voltage distortion, which can then be detected.

2.3. Slip Mode Frequency Shift-SMS

SMS applies positive feedback to the phase voltage in a node as a method for phase shift, hence the short-term frequency. This frequency will not affect the frequency of the network. With the SMS method, the phase angle of the inverter voltage, instead of always being controlled when it is zero, is designed to be a function of frequency at the point of common voltage coupling, as shown in Figure 6. The phase response curve of the inverter is designed to increase the phase of the inverter faster of phase (RLC) load, with the rate of change of power factor close to the energy consumption frequency ω_0. This makes the phase frequency an unstable operating point of the inverter [17]. While the DSO network is connected to a distribution source, it stabilizes the operating point at the network frequency by providing a solid phase and frequency reference. However, once the island drive is formed, the operating point of the load frequency and the PV of the inverter must be at the intersection of the load line and the response curve of the inverter. If there is a small perturbation of the node frequency at a point of joint coupling of a voltage away from 60 Hz, the S-shaped phase response curve causes an increase in the error phase rather than a decrease. It is a positive feedback mechanism and causes classical instability. This instability of the inverter at ω_0 causes it to amplify the change and bring the system to a new operating point, at either point A or C, depending on the direction of the disturbance. If the phase curve of the inverter is correctly designed for this RLC load, points A and C will be at frequencies outside (*OFP/UFP*) above / below the frequency limits, and the inverter will shut off due to a frequency error.

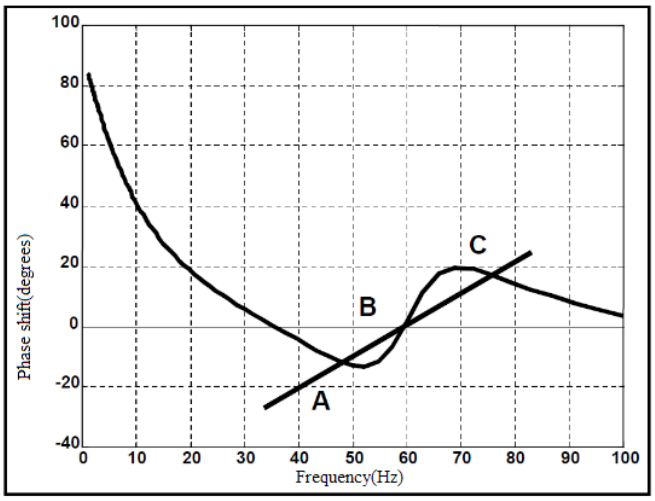

Figure 6: Voltage phase angle and frequency on the inverter showing the moment when the SMS method recognizes the island operation of the distribution source. [10]

2.4. Frequency Deviation

Frequency deviation, or active frequency (FD) method, is easily implemented in a microprocessor-controlled PV inverter. In this method, the waveform of the current injected into the node by the PV inverter is slightly distorted, so that there is a continuous trend of frequency change. However, when connected to the network, it is impossible to change the frequency without triggering the frequency protection. When disconnected from the grid, the voltage frequency is forced moving up and / or down, shown in Figure 7, increasing the frequency shift caused by the system seeking a resonant load frequency. The ratio of zero time tz to half the period of the voltage waveform called the "chopping fraction" (9):

$$cf = \frac{2t_z}{T_{Vutil}} \tag{9}$$

Then the output current of the PV inverter reaches zero, it remains zero during t_z before the start of the second half-period. For the first part of the second half-period, the output current of the PV inverter is the negative half of the sine wave from the first half-period. When the PV inverter current reaches zero again, it remains zero until the zero supply voltage is exceeded. It is important to note that zero time in the second half-period is not fixed and may not equal t_z.

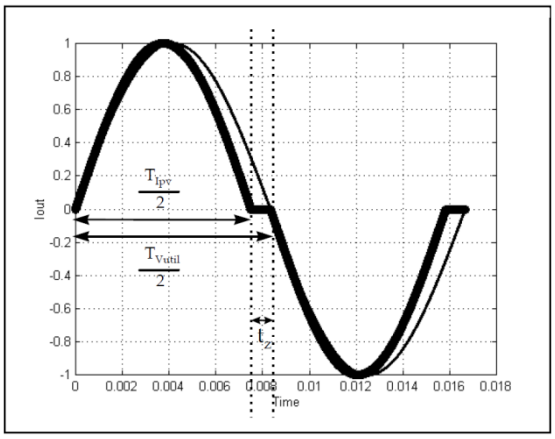

Figure 7: Waveform example used to apply Frequency Deviation method to detect island work [10]

2.5. Sandia Frequency Shift – SFS

In this method, the voltage frequency at the node of the joint junction point to which the positive feedback is applied depends on the type of inverter. There are two cases under consideration. Those are:

1. The inverter is two-way,
2. The inverter is one-way.

For positive feedback would to be applied, the section defined in Figure 7 is made to be a function of the frequency waveform error:

$$cf = cf_0 + K\left(f_a - f_{line}\right) \tag{10}$$

Where cf_0 is the chopping fraction when there is no frequency error, K is the acceleration coefficient, which does not change direction, fa is the measured frequency of the voltage at the joint point, and f_{line} is the frequency of the power source. When PV is connected to the network, smaller frequency changes are detected and the method tries to increase the frequency change, but the rigidity of the network prevents any change. When the singular network shuts off and fa increases the frequency error, the shredding fraction increases and the PV inverter also increases its frequency. The inverter thus acts to amplify the frequency deviation, and this process continues until the frequency reaches the threshold. The process is similar if f_a decreases; eventually the chopping fraction becomes negative, which means that the inverter period becomes longer than the voltage period at the joint junction point.

It has been studied and proved very effective [28]. It should also be noted that SFS is implemented in conjunction with Sandia Voltage Shift (SVS) method for detecting island work occurrence. This combination has been found to be extremely effective [29].

2.6. Sandia Voltage Shift – SVS

This is the third method that uses positive feedbacks to prevent island labour from occurring. Sandia Voltage Shift (SVS) applies positive feedback to the voltage amplitude at the joint junction point. If there is a decrease in voltage amplitude (usually the RMS value measured in practice), the PV inverter reduces its current output and thus its output power. If a point to a distribution network is connected to a distribution source, there is little or no effect when the power is reduced. When the distribution network is absent and there is a decrease in voltage, there will be a further decrease in voltage amplitude as dictated by the. This additional decrease in the voltage amplitude leads to a further decrease in the output current of the PV inverter, which leads to a possible decrease in the voltage that can be detected by the under-voltage protection.

2.7. Frequency Jump – FJ

The frequency jump method (FJ) is a modification of the frequency shift method and is conceptually similar to impedance measurement. In the FJ method, the zero zones are inserted in the output current waveform, but not in each cycle. If the sample is sufficiently sophisticated, FJ can be relatively effective in preventing island work if used with a single inverter.

2.8. Mains Monitoring Units with Allocated All-pole Switching Devices Connected in Series – MSD or ENS

The ENS is actually a description of an automated special circuit consisting of two independent, different parallel monitoring devices with assigned circuits connected in series in a phase and neutral conductor. In other words, the two switching devices in the series are independently controlled. Each of these independent units continuously monitors the quality of the connected network by monitoring voltage, frequency and impedance. All units monitor voltage, frequency and impedance. When and by what impedance is checked by method is at the heart of most technological improvements. The general block diagram described in DIN VDE 0126 is shown in Figure 8. The device typically injects low current to determine the impedance.

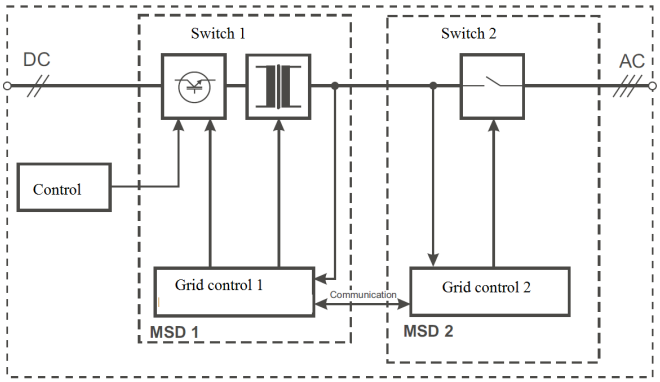

Figure 8: Design of device for automatic separation of distribution source N –VDE-0126

3. COMMUNICATION METHODS

The third category of island work detection methods is based on communication between the distribution source and the DSO network. In [10], the three main methods that use communication are described in detail:

- Power line to serve as a carrier for communication between the PV changer and the auxiliary network [30].
- Signal produced by shutdown.
- SCADA as a method uses the installation of voltage sensors at the point where the distribution source is connected and the integration of these sensors into the SCADA system for monitoring and alarming the PV system for shutdown in case of island operation [31].

Communication methods require the inclusion of efficiency in the implementation of island discovery programs, which make them less acceptable for practical implementation and costly. Because communication also adds to the costs of distribution source and distribution network infrastructure, these methods are rarely used today. Using communication standards such as IEC 61850 [32] and its distributed source extensions [33], the SCADA / DMS application can be applied to communicate to all distributed sources in a distribution network and inform them about island conditions online.

3.1. Power Line Serves as a Communication Carrier

The use of communication lines with transmission lines (PLTL) has been proposed as a way of solving the problems associated with detecting the flow of the inverters [34]. PLTL systems send a low energy communication signal through the conduit itself. Figure 9 shows an example of a system configuration that incorporates a line method as a carrier to prevent island operation of a distribution

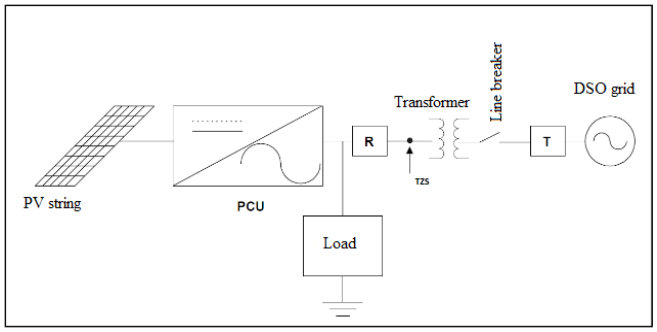

Figure 9: System setup including PLTL transmitter (T) and receiver (R)

3.2. Signal Generated at Distribution Network Shutdown

As the PLTL-based method just described, the signal generated on a distribution network shutdown (SPD) method also relies on communication between the network and the PV inverter to prevent island operation. The SPD differs from the PLTL -based method in that the power line is not used as a communication channel. Instead, the utility shutter is equipped with a small transmitter that sends a signal to a distributed source via a microwave, telephone line, or otherwise, when the switch is reopened. In this way, the state of the switch is directly communicated to the distributed source.

3.3. Supervisory Control and Data Acquisition –SCADA

Integrating a PV changer into the SCADA system is a logical choice for preventing island work. Utility systems already use an extensive communications and sensor network to control their own systems, monitor the status of their systems, and enable rapid response to unforeseen circumstances. Most DSO systems include instrumentation from the highest level of transmission voltage, to the lowest-level control device that can be controlled in the distribution system (usually in a distribution station), so that the SCADA communication network covers most of the energy network. Using the SCADA system to prevent island labour is easy. When a PV changer is installed, voltage sensors can be installed in the local area of utility systems if such sensors are not already available. If these sensors detect voltage at a time when the power source is disconnected from that part of the system, alarms or corrective actions may be taken.

4. HYBRID METHODS

Hybrid methods are the latest group of islanding protection solutions. Hybrid methods tend to combine the benefits of passive and active methods into one localized scheme for protection against islanding [34]-[36]. Although in the first place it seems that the non-detection zone is covered, new problems arise when combining passive and active methods and because more parameters are included in the analysis, there is a problem: quality of electricity, difficult adaptation to different types of distributed sources.

5. MACHINE LEARNING METHODS

Until now, Artificial Intelligence (AI) methods have not been used as much for this purpose, that is, to identify islanding. However, the complexity of the islanding protection problem requires the use of non-analytical methods, and thus does not use conventional methods that require a huge mathematical apparatus, which is expensive to calculate in terms of time and amount of input parameters, from a real-time perspective. Artificial intelligence methods also have a very complex mathematical apparatus that tends to grow quantitatively on a case-by-case basis [37]-[39]. Nevertheless, they are very fast to use after successful training and successful recognition of the phenomenon being processed, and after application it becomes fast and effective with allowed tolerance [40][41].

6. CONCLUSION

Table I shows the main features of main categories of island detection methods of distributed sources. Passive methods are the basic protection package of any distrib-

uted source connected to the network. As of today, active methods are preferred because of their low non-detection zone. However, one of the major drawbacks that may contribute to the shift from using active methods is their negative contribution to energy quality of the grid. The future availability of a communication network for the electricity network, combined with the greater interest of utility companies in monitoring the assets in the network, may facilitate the shift towards the use of communication methods to detect islanding.

Table I: Comparison of detection methods for distributed sources.

Method	Advantages	Disadvantages	Positive for network
Passive	* Network positive * Easy and inexpensive to apply	* non-detection zones large compared to other methods	YES
Active	* small no detection zones * some easy-to-apply methods	* May cause quality problems for el. energy * Can initiate false shutdown signal * Some are difficult to apply * Possible interaction between inverters on the same network	* Suitable for finite number of sources
Communication	* Reliable * Some easy-to-use methods * Theoretically no detection zone	* Expensive to apply * Communication infrastructure required * Necessary involvement of DSO components in the working method	YES

REFERENCES

[1] M. A. Eltawil, Z. Zhao.: Grid-connected photovoltaic power systems: Technical and potential problems—A review, Renew Sust. Energ Rev, 14 (1), pp. 112–129, November 2010

[2] S. Dutta, P. K. Sadhu, M. J. Bharata Reddy, D. K. Mohanta: Shifting of research trends in islanding detection method - a comprehensive survey, Dutta et al. Protection and Control of Modern Power Systems, DOI: 10.1186 /s41601-017-0075-8, December 2018

[3] F. De Mango, M. Liserre, A. Dell'Aquila, A. Pigazo: Overview of antiislanding algorithms for PV systems, Part I: Passive methods, 12th International Power Electronics and Motion Control Conference, pp. 1878–1883, DOI: 10.1109 / EPEPEMC.2006.4778680, February 2006

[4] G. J. Vachtsevanos, H. Kang: Simulation studies of islanded behavior of grid-connected photovoltaic systems. IEEE Transactions on Energy Conversion, vol. 4, no.2, pp. 177–183, DOI: 10.1109 / 60.17909, June 1989

[5] K. Ahmad, J. K. N. Edhura Selvaraj, N. A. Rahim: A review of the islanding detection methods in grid-connected PV inverter, Renewable and Sustainable Energy Reviews, Elsevier, vol. 21 (C), pp. 756-766, DOI: 10.1016 / j.rser.2013.01.018, May 2013

[6] Y. Zhihong, A. Kolwalkar, Y. Zhang, D. Pengwei, R. Wallinr: Evaluation of anti-Icelandic schemes based on nondetection zone concept, Power Electronics, IEEE Transactions on. Vol.19. No.5. pp. 1171-1176, September 2004

[7] M. Khodaparastan, H. Vahedi, F. Khazaeli: A novel hybrid islanding detection method for inverter-based DGs using SFS and ROCOF, IEEE Transactions on Power Delivery, DOI: 10.1109/TPWRD.2015.2406577, February 2015

[8] H. Vahedi, G. B. Gharehpetian, M. Karrari: Application of Duffing Oscillators for Passive Islanding Detection of Inverter-Based Distributed Generation Units, IEEE Transactions on Power Delivery, DOI: 10.1109 / TPWRD.2012.2212251, October 2012

[9] H.H. Zeineldin, S. Kennedy: Sandia Frequency Shift Parameter Selection to Eliminate Non-Detection Zones, IEEE Transactions on Power Delivery 24 (1): 486 - 487, DOI 10.1109 / TPWRD. 2008.2005362, February 2009

[10] W. Bower, M. Ropp: Evaluation of islanding detection methods for photovoltaic utility interactive power systems, IEA-PVPS, http: //www.iea-pvps. org, Online report T5-09, March 2002

[11] H. Kobayashi, K. Takigawa: Islanding Prevention Method for Grid interconnection of Multiple PV Systems, Proceedings of the 2nd World Conference and Exhibition on Photovoltaic Solar Energy Conversion, Hofburg Congress Center, Vienna, Austria, June 1998

[12] Photovoltaic Inverter: Conference Record of the Twenty-Eighth IEEE Photovoltaic Specialists Conference - 2000 (Cat. No.00CH37036), DOI: 10.1109 / PVSC.2000.916228, September 2000

[13] R. Best. Phase-Locked Loops: Theory, Design, and Applications, 2nd. Ed., Pub. McGraw-Hill Inc., ISBN-10: 0071493751, August 2007

[14] S. J. Ranade, N. R. Prasad, S. Omick, L. F. Kazda: A Study of Islanding in Utility-Connected Residential Photovoltaic Systems, Part I: Models and Analytical Methods, IEEE Transactions on Energy Conversion, vol. 4, no. 3, pp. 436-445, DOI: 10.1109 / 60.43246, October 1989
[15] R. H. Wills: The Interconnection of Photovoltaic Systems with the Utility Grid: An Overview for Utility Engineers, Sandia National Laboratories Photovoltaic Design Assistance Center, no. SAND94-1057, October 1994
[16] R.I Somalwar, S. Kadwane, D.K. Mohanta: Harmonics-Based Enhanced Passive Islanding Method for Grid-Connected System, Electric Power Components and Systems, DOI 10.1080 / 15325008.2017.1361485, December 2017
[17] C. Jeraputra, P. Enjeti: Development of a robust anti-islanding algorithm for utility interconnection of distributed fuel cell powered generation, IEEE Trans. he Power Electronics, vol. 19, no. 5, pp. 1163– 1170, DOI: 10.1109 / TPEL.2004.833439, September 2004
[18] J. B. Jeong, H. J. Kim, S. H. Back, K. S. Ahn: An improved method for anti-islanding by reactive power control, in Proc. of ICEMS'05, vol. 2, pp. 965–970, DOI: 10.1109 / ICEMS.2005.202687, September 2005
[19] G. A. Kern, R. H. Bonn, J. Ginn, S. Gonzalez: Results of Sandia National Laboratories grid-tied inverter testing, in 2nd World Conference and Exhibition on Photovoltaic Solar Energy Conversion, SAND-98-1540C, June 1998
[20] Z. Ye, L. Li, L. Garces, C. Wang, R. Zhang, M. Dame, R. Walling, N. Miller: A new family of active anti-islanding schemes based on DQ implementation for grid-connected inverters, PESC'04, vol. 1, Aachen, Germany, pp. 235–24, DOI: 10.1109 / PESC.2004.1355748, June 2004
[21] L. Asiminoaei, R. Teodorescu, F. Blaabjerg, U. Borup: A new method of on-line grid impedance estimation for PV inverter, APEC '04, vol. 3, pp. 1527–1533, DOI: 10.1109 / APEC.2004.1296067, February 2004
[22] A. Timbus, R. Teodorescu, F. Blaabjerg, and U. Borup: Online grid measurement and ENS detection for PV inverter running on highly inductive grid, IEEE Power Electronics Letters, vol. 2, no. 3, pp. 77–82, DOI: 10.1109 / LPEL.2004.834921, November 2004
[23] B. Palethorpe, M. Sumner, D. Thomas: Power system impedance measurement using a power electronic converter, Harmonics and Quality of Power, vol. 1, pp. 208–213, DOI: 10.1109 / ICHQP.2000.897026, October 2000
[24] M. Ciobotaru, V. Agelidis, R. Teodorescu: Accurate and less disturbing active anti-islanding method based on PLL for grid-connected PV inverters, in Proc. IEEE Power Electronics Specialists Conference PESC, 15–19, pp. 4569–4576, DOI: 10.1109 / PESC.2008.4592685, June 2008
[25] A. Timbus, R. Teodorescu, P. Rodriguez: Grid impedance identification based on active power variations and grid voltage control, 2007 IEEE 42nd IAS Annual Meeting Industry Applications Conference, pp. 949–954, DOI: 10.1109 / 07IAS.2007.147, September 2007
[26] H. Kobayashi, K. Takigawa, E. Hashimoto: Method for Preventing Islanding Phenomenon on Utility Grid with a Number of Small Scale PV Systems, 21st IEEE Photovoltaic Specialists Conference (1991), pp. 695-700. DOI: 10.1109 / PVSC.1991.169299, October 1991
[27] A. Wyote, R. Belmans, K. Leuven, J. Nijs: Islanding of Grid-Connected Module inverter, 28th IEEE Photovoltaic Specialists Conference, pp. 1683-1686, October 17-22, DOI: 10.1109 / PVSC.2000.916226, September 2000
[28] J. Stevens, R. Bonn, J. Ginn, S. Gonzalez, G. Kern: Development and Testing of an Approach to Anti-Islanding in Utility-Interconnected Photovoltaic Systems, Sandia National Laboratories report SAND2000-1939, Sandia National Laboratories, Albuquerque, NM, DOI: 10.2172 / 759506, August 2000
[29] M. E. Ropp, K. Aaker, J. Haigh, N. Sabbah: Using power line carrier communications to prevent islanding [of pv power systems], Twenty-Eighth IEEE Photovoltaic Specialists Conference, p. 1675–1678, DOI: 10.1109 / PVSC.2000.916224, September 2000
[30] N. Strath: Islanding detection in power systems, Ph.D. dissertation, Lund University, [Online] Available at: http://www.iea.lth.se/publications/ Theses / LTH-IEA-1051.pdf, 2005
[31] IEC, IEC 61850 Communication networks and systems in substations, IEC Std., 2003
[32] IEC 61850-7-420 Communications Systems for Distributed Energy Resources (DER), IEC Std., 2006
[33] S.K. Chakravarthy, C.V. Nayar, Determining the Frequency Characteristics of Power Networks Using ATP, Electric Machines and Power Systems, vol. 25, pp. 341-353, DOI: 10.1080 / 07313569708955744, November 1997
[34] D. Mlakić, H. R. Baghaee, S. Nikolovski: Gibbs Phenomenon-Based Hybrid Islanding Detection Strategy for VSC-Based Microgrids Using Frequency Shift, THDU, and RMSU, IEEE Transactions on Smart Grid, DOI: 10.1109/TSG.2018.2883595, 27 November 2018
[35] M. Mohiti, Z. Mahmoodzadeh, M. Vakilian: A hybrid micro grid islanding detection method, 13th International Conference on Environment and Electrical Engineering (EEEIC), DOI: 10.1109 / EEEIC-2.2013.6737933, 1-3 Nov. 2013
[36] D. Mlakić, H. R. Baghaee, S. Nikolovski: Hybrid Method for Islanding Detection of Distributed Generators in LV Distribution Networks, IEEE EUROCON-18th International Conference on Smart Technologies, DOI: 10.1109 / EUROCON.2019.8861902, 1-4 July 2019
[37] B. Matic-Cuka, M. Kezunovic: Islanding Detection for Inverter-Based Distributed Generation Using Support Vector Machine Method, IEEE Transactions on Smart Grid, DOI: 10.1109 /TSG.2014.2338736, August 2014
[38] H. Bitaraf, M. Sheikholeslamzadeh, A. M. Ranjbar, B. Mozafari: A novel SVM approach of islanding detection in micro grid, IEEE PES Innovative Smart Grid Technologies, DOI: 10.1109 / ISGT-Asia.2012.6303335, 21-24 May 2012

[39] H. R. Baghaee, D. Mlakić, S. Nikolovski, Tomislav Dragičević: Anti-Islanding Protection of PV-based Microgrids Consisting of PHEVs using SVMs, IEEE Transactions on Smart Grid, DOI: 10.1109 / TSG.2019.2924290, 21 June 2019
[40] H. R. Baghaee, D. Mlakić, S. Nikolovski, Tomislav Dragičević: Support Vector Machine-based Islanding and Grid Fault Detection in Active Distribution Networks, IEEE Journal of Emerging and Selected Topics in Power Electronics, DOI: 10.1109 / JESTPE.2019.2916621, 14 May 2019
[41] D. Mlakić, H. R. Baghaee, S. Nikolovski: A Novel ANFIS-Based Islanding Detection for Inverter-Interfaced Microgrids, IEEE Transactions on Smart Grid, DOI: 10.1109 / TSG.2018.2859360, 24 July 2018

BIOGRAPHY

Dragan Mlakić was born in 1981 in Travnik, BiH. He completed his elementary school education finishes at “Hasan Brkić” in Stojkovići, Novi Travnik in 1996. He then attended the Common Grammar School “Novi Travnik”, in Novi Travnik with major in natural sciences and mathematics and completes it in 2000. That same year, he enrolled at the Faculty of Electrical Engineering of the Sarajevo University in Sarajevo, and completed his studies in 2007, with a professional title of a electrical engineering undergraduate. (dipl.ing.el). In 2008, he enrolled in a master’s degree programme at the same faculty, graduating in 2013 with a scientific title of a Master of Science. After graduation, he was employed by the Elektroprivreda Hrvatske zajednice Herceg-Bosne d.d. Mostar in Novi Travnik, as an Independent Engineer. In 2015, he enrolled in a doctoral study programme (Ph.D.) at the Faculty of Electrical Engineering in Osijek, at the Josip Juraj Strossmayer University of Osijek. He completed his doctoral studies in 2019. receiving a scientific title of a Ph.D. in Electrical Engineering.