ARCHITECTURE CIVIL ENGINEERING ENVIRONMENT
The Silesian University of Technology
No. 1/2023

doi: 10.2478/ACEE-2023-0005

DYNAMIC REPLACEMENT: THE INFLUENCE OF POUNDER DIAMETER AND GROUND CONDITIONS ON SHAPE AND DIAMETER OF THE COLUMNS

Sławomir KWIECIEŃ [a*], Magdalena KOWALSKA [b]

[a] Assoc. Prof. PhD, DSc; Department of Geotechnics and Roads, Faculty of Civil Engineering, Silesian University of Technology, Gliwice, Poland
ORCID 0000-0001-6401-2471
*E-mail address: *slawomir.kwiecien@polsl.pl*

[b] PhD; Assist. Prof. PhD; Department of Geotechnics and Roads, Faculty of Civil Engineering, Silesian University of Technology, Gliwice, Poland
ORCID 0000-0001-7549-2722

Received: 10.03.2022; Revised: 28.09.2022; Accepted: 13.12.2022

Abstract
Dynamic replacement (DR) is a ground improvement technique that has been used now for almost 50 years. During the formation of a DR column a crater is created which is then filled with a coarse material and compacted again. The length, diameter and shape of such a column cannot be observed directly, which makes the design and execution more troublesome. In the article presented are the dimensions and shapes of 18 columns from eight different test fields. They were formed by means of pounders of various masses (9 or 11.5 Mg) and dimensions (1.00 or 1.05 m in diameter, 1.8 or 2.0 m in height). Based on the observations and measurements, it was concluded that the shape and diameter of a DR column is influenced by the parameters of the soft soil that is supposed to be improved (its thickness, physical state and location in the profile), as well as by the diameter of the pounder. It was revealed that, as the length of the columns increased, the column shapes changed from: a cylinder, through a truncated cone, a barrel to an asymmetric barrel. The diameters of all of the columns were 1.4–2.8 times larger than the diameters of the used pounders and the largest values were noted along the depth of the weakest layer. The presented results may be useful to the profession. When the thickness of the weak soil, its type and state are known and the technological parameters are similar to the ones presented in this paper, it is possible to predict the shape and diameter of the columns depending on the diameter of the pounder.

Keywords: **Dynamic replacement columns; Geotechnical engineering; Ground improvement; Column shape; Weak soils.**

1. INTRODUCTION

The dynamic replacement method (DR) has been invented in 1975 by Louis Ménard [1]. It belongs to the deep-ground improvement techniques. A heavy pounder (the masses range from 3.6 Mg [2] to 26 Mg [3]) is dropped from a significant height of up to 15–25 m. The width or diameter of the pounders used in the practical applications vary from 0.61 m [2] to 2.4 m [4]. Typically used shapes of the pounders are: cuboid, orthogonal prism, truncated cone or barrel-like. A crater is formed (Fig. 1b) – in very weak soils its depth should not exceed the height of the pounder (H_p), otherwise it is difficult to lift the pounder back. To obtain longer columns, the aggregate must be driven below the crater. The void is filled with a coarse material (gravel, rubble, stone aggregate, debris, slag, etc.) (Fig. 1c) and the pounder is dropped again once or several times (Fig. 1d). The procedure is repeated (Fig. 1e) until the penetration of the pounder becomes negligible or a noticeable heave in the vicinity of the

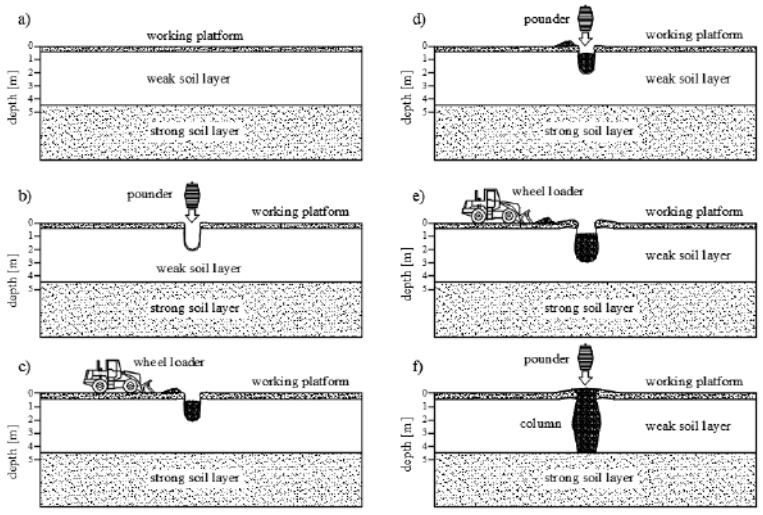

Figure 1.
Process of dynamic replacement: a) construction of the working platform, b) drop of pounder and crater creation, c) crater backfill, d-e) drop of pounder and crater backfill, f) complete DR column [15]

column is observed. As the result, a column is formed (Fig. 1f) – the parameters of which are improved when compared with the original soil. The maximum final length of a typical end-bearing column is usually 5–7 m [4–6].

Dynamic replacement columns are used to improve mainly very soft and soft organic and fine soils (for weak coarse soils vibratory methods or dynamic compaction are better suited).

The DR execution process improves the bearing capacity and stiffness of the subsoil [7] by, simply, replacement of the soft soil with a stronger one. The time of consolidation is noticeably reduced as well [8]. It is achieved by two mechanisms: (1) shortening of the drainage path and (2) reduction of the vertical load applied on the soft soil as its larger part is transferred to the stiffer column. The acceleration of consolidation due to drainage was first noticed and described for vertical drains without regard for their stiffness [9, 10, 11], while the effect of the stiffness was investigated among others in [12, 13, 14].

Due to the specific method of execution, the DR columns are predominantly non-cylindrical [15] – their cross-section area is not constant with depth. The major impact on the eventual diameter of the column (D_c) has the width or diameter of the pounder (D_p), because it determines the initial diameter of the crater that is later filled with the replacement material. Equally important is the soil profile as the column usually crosses various layers of different thicknesses, grain size distributions and densities or consistencies. As the aggregate is driven into the ground it is pushed in all directions, so the diameter of the column is always larger than the diameter of the pounder and it is larger in softer layers than in the stiffer ones. Obviously, the diameter of the column is also influenced by the total impact energy applied. This and the fact that the DR column length cannot be controlled directly during the execution make up to the main difference between the dynamic replacement and other methods in which columns are formed in a soft ground, such as vibro replacement [16] or geopiers [17]. In both of these methods, the depth of the column is controlled quite precisely, and the final diameter is not much different than the diameter of the tool inserted into the ground – so it can be controlled at least partially. There exists no official standard regarding the design or execution of the DR columns. To plan and effectively design a DR ground improvement it is recommended to conduct a pilot study (trial *in situ* tests). It serves to prove the design concept and allows necessary adjustments in the execution procedure and column spacing. It is also recommended to excavate the columns to discover their true shape and dimensions, which is necessary in the further analytical modelling and design. A comparable experience is highly valuable.

2. LITERATURE REVIEW

The research on the shapes of the DR columns is quite scarce. Depending on the approach, it can be classified into two groups. One involves case studies providing only the basic information on the diameters and lengths [4], [18–21], where the diameters

Table 1.
Literature review

Author(s)	Ground conditions	D_c/D_p [-]	M_p / H_d [Mg] / [m]	Shapes of columns
Kumar [4]	0–0.6 m: fill 0.6–1.5 m: medium stiff sandy silt 1.5–3.0 m: medium stiff silty clay 3.0–12.5 m: loose fine and medium sand	1.0 - 1.25	19 / 21	-
Varaksin and Hamidi [19]	0–1.5 m: disturbed clay from 1.5 m: very stiff clay	1.41	38.5 / 5	-
Lo *et al.* [25]	0–5.8 m: peaty clay from 5.8 m: old alluvium	-	15 / 15	Inverted truncated cone
Chua *et al*. [5]	0–2 m: loose sand (fill) 2–3 m: soft clay 3–10 m: medium dense to dense sand	-	24–26 / 10–20	Inverted truncated cone
Sękowski *et al*. [27]	0–1.5 m: working platform (semi-dense medium sand) 1.5–3.2 m: soft organic mud 3.2–5.0 m: semi-dense medium sand	1.7–2.4	11 /10	Inverted truncated cone
Gunaratne *et al*. [26]	0–1.2 m: working platform 1.2–3.0 m: organic soil from 3.0 m: silty sand	2.46	4 / 12	Cylindrical
Kwiecień and Sękowski [23]	various ground conditions (11 columns)	1.5–2.7	10.5–12.0 / 15 - 25	Cylindrical, Inverted truncated cone
Kwiecień [22], Kwiecień and Sękowski [24]	various ground conditions (34 columns)	1.23–4.1	9–12 / 15–25	Inverted truncated cone, Barrel-shaped
Kwiecień [15]	various ground conditions (65 columns)	-	9–24 / 15–25	End bearing columns: cylindrical, truncated cone, barrel, asymmetrical barrel Floating columns: cylindrical, barrel, inverted truncated cone

D_c – diameter of the column, D_p – diameter of the pounder, H_p – height of the pounder, H_s – thickness of the weak soil, M_p mass of the pounder, H_d – height of the pounder drop

were usually measured at the terrain level. The second group is less numerous and comprises articles where the column shapes and dimensions are determined directly from the measurements of the excavated columns [15], [22–25], or indirectly from penetration tests [5], [26] or geophysical survey [27]. Table 1 presents the summary of the literature review including the observed shapes of the columns, the D_c/D_p ratios and the ground profiles at the sites.

For DR columns in clayey and silty medium stiff and disturbed soils, Kumar [4], as well as Varaksin and Hamidi [19], obtained columns with diameters only up to 1.25 to 1.41 times larger than the diameters of the pounders. In the soils with some organic content, characterized by lower strength and stiffness, the noted diameters of the columns were approximately up to 2.4 times larger than the diameters of the pounders [26]. The largest diameters were obtained in fibrous peat [22] – the D_c/D_p ratio was equal to 4.1.

The first author has been investigating the shapes of DR columns since 2007. Kwiecień and Sękowski [24] identified up to five different shapes, which confirms the specific nature of this technology in relation to the other methods of column formation, where the columns are mainly cylindrical [16, 17]. Kwiecień [15] indicated the influence of the soil thickness (expressed as the ratio of the weak soil thickness H_s to the pounder height H_p) on the end-bearing columns' shapes: the shape of the columns changed from a cylinder (for $H_s/H_p = 1$), through a truncated cone ($H_s/H_p = 1–1.5$), a barrel ($H_s/H_p = 1.5–2.0$) and asymmetrical barrel ($H_s/H_p = 2–2.5$). For the floating columns three common shapes were identified: a cylinder, a barrel and an inverted truncated cone (regardless of the H_s/H_p ratio).

In none of the research the influence of the pounder diameter and ground conditions (soil type and consistency index) on the shape of end-bearing columns were analysed. This information is important from the practical point of view to gain the comparable experience for future predictions and design. The

Table 2.
Geographic location and ground conditions at the sites

Site No.	Location (Poland)	Ground conditions
1.	S7 motorway, km 711+050	1. Organic clayey mud, I_C = 0.56 – 0.60 (0 – 1.70 m – **C1**; 0 – 2.00 m – **C2**) 2. Gravel, I_D = 50% (down to 4.00 m)
2.	A1 highway, km 516+715	1. Working platform (0 - 0.60 m) 2. Organic Mud, Ic = 0.56 – 0.60 (0.60 - 1.50 m) 3. Silty Clay + Or, Ic = 0.62 (1.50 – 2.00 m – **C3**; 1.50 – 2.10 m – **C4**) 4. Sandy Silt + Or, Ic = 0.42 (2.00 – 2.50 m – **C3**; 2.10 – 2.60 m – **C4**) 5. Fine Sand, I_D = 65% (down to 5.00 m)
3.	A1 highway, km 512+520	1. Working platform (0 – 0.50 m) 2. Made ground (0.50 – 1.20 m) 3. Sandy Silt, I_C = 0.58 (1.20 – 2.80 m – **C5**; 1.20 - 3.00 m – **C6**; 1.20 - 3.30 m – **C7**) 4. Coarse Sand, I_D = 65% (down to 5.00 m).
4.	A4 highway, km 467+260	1. Working platform (0 - 0.50 m) 2. Silty Clay, I_C = 0.50 (0.50 – 1.00 m – **C10**) 3. Sandy Silt, Ic = 0.50 (0.50 – 3.20 m – **C8**; 0.50 – 3.10 m – **C9**; 1.00 – 3.50 m – **C10**) 4. Medium Sand, I_D = 55 – 70%, (down to 5.0 m)
5.	A4 highway, km 461+050	1. Working platform (0 - 0.50 m) 2. Silty Clay + Or, I_C = 0.65 – 0.76 (0.50 – 2.30 m – **C11**; 0.50 – 2.10 m – **C12**) 3. Sandy Silt, I_C = 0.52 – 0.56 (2.30 – 3.20 m – **C11**; 2.10 – 3.20 m – **C12**) 4. Medium Sand, I_D = 70 – 90% (down to 5.00 m)
6.	A4 highway, km 462+600	1. Working platform (0 – 0.50 m) 2. Silty Clay + Or, I_C = 0.50 (0.50 – 1.00 m) 3. Peat (1.00 – 1.20 m) 4. Organic Mud, I_C = 0.44 (1.20 – 3.40 m) 5. Gravely Sand, I_D = 50% (down to 5.00 m)
7.	A4 highway, km 464+720	1. Working platform (0 - 0.20 m 2. Silty Clay + Or, I_C = 0.76 (0.20 – 1.40 m) 3. Organic Mud, I_C = 0.37 (1.40 – 3.40 m – **C15**; 1.40 – 3.50 m – **C16**) 4. Medium Sand, I_D = 80% (down to 5.00 m)
8.	A4 highway, km 461+150	1. Working platform (0 - 0.50 m) 2. Clay, Silty Clay, I_C = 0.70 – 0.72 (0.50 – 2.40 m – **C17**; 0.50 – 2.50 m – **C18**) 3. Medium Sand, I_D = 0.30 (2.40 – 3.2 m – **C17**) or Silty Clay, IC = 0.6 (2.5 – 3.2 m – **C18**) 4. Silty Clay, I_C = 0.60 (3.20 – 3.80 m – **C17** & **C18**) 5. Medium Sand, I_D = 55% (down to 6.00 m)

I_C – consistency index: $I_C = (w_L - w_n)/(w_L - w_p)$, where: w_n – natural water content, w_L – liquid limit, w_p – plastic limit; depending on I_C the soil is: very stiff ($I_C > 1$), stiff ($I_c = 0.75 – 1$), firm ($I_C = 0.5 - 0.75$), soft ($I_C = 0.25 – 0.5$) or very soft $I_C < 0.25$) [28]; I_D – density index: $I_D = (e_{max} - e)/(e_{max} - e_{min})$, where e_{max} – void ratio in the loosest state, e_{min} – void ratio in the densest state, e – natural voids ratio of the deposit, Or – with organic content; depending on I_D the soil is: very loose ($I_D = 0 – 15\%$), loose ($I_D = 15 – 35\%$), medium dense ($I_D = 35 – 65\%$), dense ($I_D = 65 – 85\%$) or very dense ($I_D = 85 – 100\%$) [28]

diameter variability with depth is necessary for instance to estimate more precisely the volume of the material needed or the column spacing. Such knowledge is indispensable also for precise numerical analyses (e.g. finite element methods), which are usually implemented in the current design. This can be used for interpretation of the results of trial plate load tests as well [15].

3. RESEARCH PROGRAM

Eight building sites in Poland were chosen, at which various road engineering construction projects involving DR were carried out by companies with more than 10 years of experience in the dynamic replacement. The authors did not have any influence on the choice of the replacement material (aggregate) – on site No. 1 crushed sandstone was used, while on the other sites – blast furnace slag. The columns were formed with barrel-shaped pounders (Table 3), dropped from the height of up to 15 m, in

Table 3.
List of investigated columns, their diameters, lengths and technological information

Site No.	Column	Diameters of the column (D_{cmin} – D_{cmax})	Length of the column H_c	Shape, diameter (D_p), height (H_p) and mass (M_p) of the pounder	Number x height of the pounder drops/type, grading (d) and volume (V) of the aggregate
1.	C1 C2	2.00–2.24 2.00–2.28	2.00 m 2.00 m	Barrel-shaped, D_p = 1.05 m, H_p = 2.00 m, M_p = 11.50 Mg	1 x 5 m, 10 x 15 m, 1 x 5 m crushed sandstone d = 0 – 400 mm, V = 8.0 m^3
2.	C3 C4	1.60–2.50 1.70–2.50	2.50 m 2.60 m	Barrel-shaped, D_p = 1.00 m, H_p = 1.80 m, M_p = 9 Mg	1 x 5 m, 17 x 15 m, 1 x 5 m, blast furnace slag d = 10 – 120 mm, V = 9.5 m^3
3.	C5 C6 C7	1.70–2.47 1.80–2.39 1.80–2.40	2.90 m 3.10 m 3.40 m		1 x 5 m, 22 x 15 m, 1 x 5 m blast furnace slag d = 10 – 120 mm, V = 11,5 - 13.0 m^3
4.	C8 C9 C10	1.40–2.39 1.90–2.27 1.50–2.26	3.20 m 3.10 m 3.50 m		1 x 5 m, 22 x 15 m, 1 x 5 m blast furnace slag d = 0 – 350 mm, V = 12.0 m^3
5.	C11 C12	1.80–2.78 1.50–2.58	3.20 m 3.20 m		1 x 5 m, 22 x 15 m, 1 x 5 m blast furnace slag d = 0 – 350 mm, V = 15.0 m^3
6.	C13 C14	1.73 - 2.80 2.00 - 2.69	3.40 m 3.40 m		1 x 5 m, 23 x 15 m, 1 x 5 m blast furnace slag d = 0 – 350 mm, V = 18.0 m^3
7.	C15 C16	2.30 - 2.60 2.20 - 2.60	3.40 m 3.50 m		1 x 5 m, 22 x 15 m, 1 x 5 m, blast furnace slag d = 0 – 350 mm, V = 17.0 m^3
8.	C17 C18	1.50 - 2.74 1.50 - 2.68	3.80 m 3.80 m		1 x 5 m, 22 x 15 m, 1 x 5 m blast furnace slag d = 0 – 350 mm, V = 18.0 m^3

three stages. In the first and third stage, relatively low energy was applied – the pounder was dropped from the height of 5 m; while in the second stage a higher energy was used as the drop height was equal to 15 m – see Table 3.

A total of 18 columns – at least two at each site, were selected for investigation. In all the cases, these were the columns that were executed as the first ones in the triangular grid to avoid the possible influence of the neighbouring columns. Further in the text the columns are marked C1, C2, …, C18. The soil profile and the physical parameters of the geotechnical layers around the columns were learned from the available geotechnical investigation reports. The soil classification was based on ISO 14688 [28] and the soil state (density index I_D or consistency index I_C) was obtained in laboratory tests (site No. 1) or from CPTu tests (sites No. 2–8). As a part of the final acceptance tests, after about 14 days from the execution, the selected columns were excavated by means of a backhoe loader. Their diameters and lengths were measured from the terrain level by means of a level staff. The soil profile was assessed macroscopically and compared with the documentation. The geographic location of the sites and the ground conditions are presented in Table 2. The cases where the boundaries of the particular soil layers next to each column at one site differed slightly are marked in the table with the column number. The last layer at each site is the strong bearing layer in which the column ended (end-bearing columns). It started at the depths of: 1.7–2.0 m (site No. 1), 2.5–2.6 m (site No. 2), 2.8–3.3 m (site No. 3), 3.1–3.5 m (site No. 4), 3.2 m (site No. 5), 3.4 m (site No. 6), 3.4–3.5 (site No. 7), 3.8 m (site No. 8). As can be noticed from Table 2, all the columns were formed mainly in the firm to soft fine and organic soils, which are the typical soil conditions in which dynamic replacement is used. In all cases, except at the site No. 1, a working platform was constructed to enable the access of the crane to the site.

4. RESULTS OF THE INVESTIGATION

The measured minimum (D_{cmin}) and maximum (D_{cmax}) diameters and lengths (H_c) of the columns are presented in Table 3 together with the informa-

Table 4.
Details on the shapes of the columns, ratio of the thickness of the improved layer and the height of the pounder, the maximum and mean consistency indexes of the soil layers along at the column length and relations to the diameters of the column and of the pounder

Site No.	Column	Diameter variation / Shape	H_s/H_p [-]	$I_{c(min)}$ [-]	$I_{c(m)}$ [-]	D_{cmax}/D_p [-]	D_{cmin}/D_p [-]	D_{cm}/D_p [-]	D_{cmax}/D_{cmin} [-]
1.	C1	constant / cylindrical	0.85	0.56	0.56	2.13	1.90	2.04	1.12
	C2		1.00	0.60	0.60	2.17	1.90	2.07	1.14
2.	C3	increases with depth / truncated cone	1.39	0.42	0.54	2.50	1.60	2.08	1.56
	C4		1.44	0.42	0.56	2.50	1.70	2.19	1.47
3.	C5	the largest diameter at the bottom / asymmetrical barrel	1.56	0.58	0.58	2.47	1.70	2.20	1.45
	C6		1.67	0.58	0.58	2.39	1.80	2.15	1.33
	C7		1.83	0.58	0.58	2.40	1.80	2.17	1.33
4.	C8	the largest diameter at the mid-length / barrel-shaped	1.77	0.50	0.50	2.39	1.40	2.09	1.71
	C9		1.72	0.50	0.50	2.27	1.90	2.10	1.19
	C10		1.94	0.50	0.50	2.26	1.50	1.99	1.51
5.	C11	the largest diameter at the bottom / asymmetrical barrel	1.78	0.56	0.62	2.78	1.80	2.36	1.54
	C12		1.78	0.52	0.66	2.58	1.50	2.27	1.72
6.	C13	the largest diameter at barrelthe mid-length /	1.89	0.44	0.45	2.80	1.73	2.45	1.62
	C14		1.89	0.44	0.45	2.69	2.00	2.45	1.35
7.	C15	the largest diameter at the mid-length /	1.89	0.37	0.52	2.60	2.30	2.44	1.13
	C16		1.94	0.37	0.51	2.60	2.20	2.38	1.18
8.	C17	the largest diameter at the bottom / asymmetrical barrel	2.11	0.40	0.68	2.74	1.50	2.30	1.83
	C18		2.11	0.30	0.54	2.68	1.50	2.37	1.79

tion on the type, grading and volume of the replacement material (aggregate) used, shape, dimensions, mass and the drop heights of the pounders. Table 4 lists the following: the details regarding the shapes of the columns; ratio of the thickness of the improved layer (H_s – between the terrain surface and the top of the bearing layer, including the working platform, where relevant) and the height of the pounder H_p; the maximum and the (weighted) mean consistency index of the soil layers along the column length ($I_{C(min)}$ and $I_{C(m)}$, respectively) and the relations between the maximum, minimum and mean column diameters (D_{cmax}, D_{cmin}, D_{cm}, respectively) and the diameter of the pounder D_p. The drawings showing the shapes and dimensions (in meters) of all the columns are presented in Fig. 2, 4, 6, 8, 10, 12, 14 and 16; while the dependence between the ratio of the column and pounder diameter (D_c/D_p) and relative depth of the column (H/H_c) are shown in Fig. 3, 5, 7, 9, 11, 13, 15 and 17.

As can be seen in Table 4, Fig. 2 and Fig. 3, the diameters of the shortest columns C1 and C2, obtained at the site No. 1, where H_s/H_p ratios were equal to 0.85 and 1.0, respectively, were constant along their length. The ratio of the maximum and minimum diameters of the columns (D_{cmax}/D_{cmin}) were equal to 1.12 and 1.14. The columns had flat bases that rested on the underlying bearing soil. The diameters of the columns were 1.9–2.2 times larger than the pounder diameter. The dynamic replacement method is uncommon in the ground conditions, where the thickness of the soft layer is smaller than the height of the pounder. At this particular place the depth at which the bearing layer started was much smaller than had been expected based on the geotechnical documentation. Even though it is not a typical situation, the results have been shown for comparison. It is worth noting that very small energy was required to form these columns – only 10 drops of the pounder in the second stage of compaction.

The columns formed at site No. 2, where the H_s/H_p ratio was equal to 1.39 and 1.44, showed almost a constant increase of the diameter with depth, thus the shape of the columns can be described as a truncated cone (Fig. 4, Fig. 5). The D_{cmax}/D_{cmin} ratio was equal to 1.47–1.56 (Table 4). The diameters of the columns

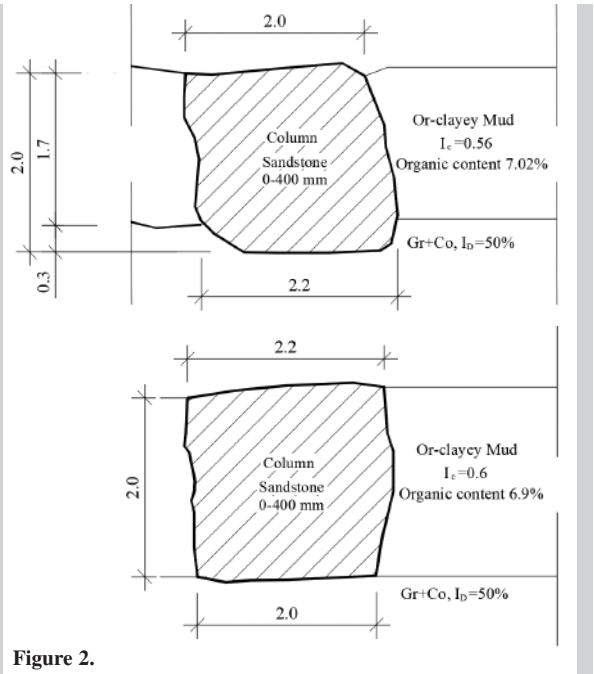

Figure 2.
Shapes of columns at site No. 1.: C1 (left), C2 (right)

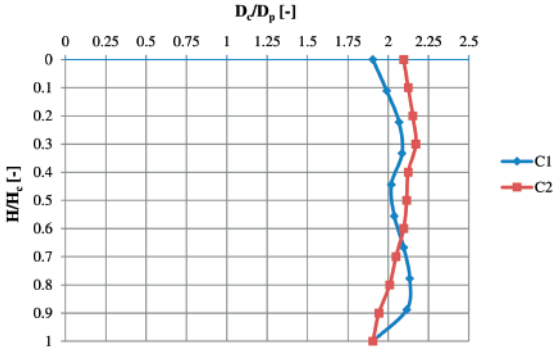

Figure 3.
Dependence between the ratio of the column and pounder diameters (D_c/D_p) and the relative depth (H/H_c) – Site No. 1, columns C1 and C2

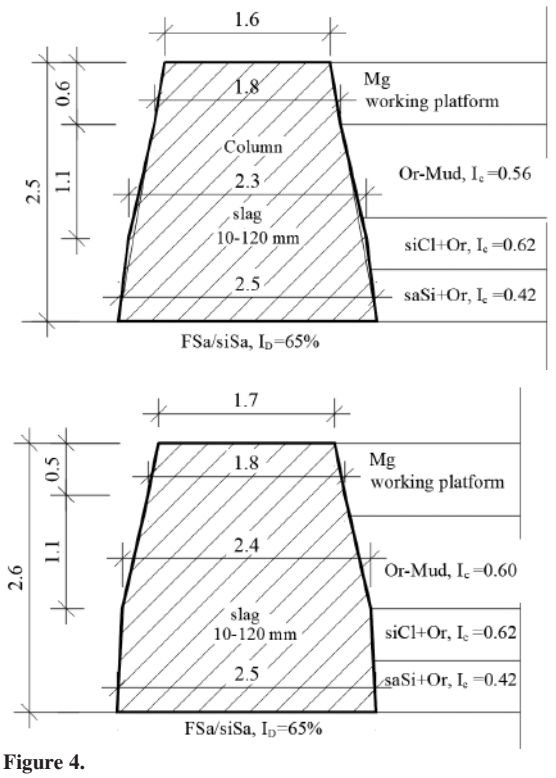

Figure 4.
Shapes of columns at site No. 2.: C3 (top), C4 (bottom)

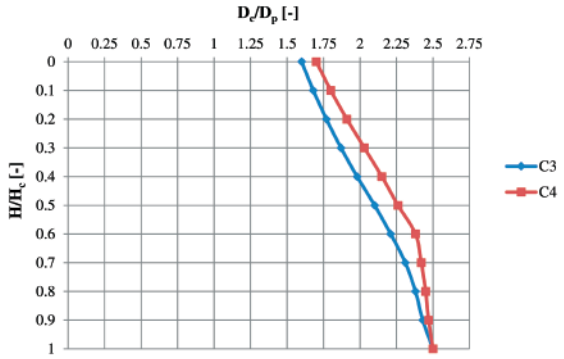

Figure 5.
Dependence between the ratio of the column and pounder diameters (D_c/D_p) and the relative depth (H/H_c) – Site No. 2, columns C3 and C4

were 1.6–2.5 times larger than the pounder diameter. The columns had flat bases, resting on the bearing soil.

At the sites No. 3 to No. 8 the thicknesses of the weak soils were larger – the H_s/H_p ratio was in the range between 1.56 and 2.11 (Table 4). Just like before, all the columns had the flat base, resting on the bearing layer, however, their diameters varied along the length. Two types of the shapes were distinguished: a barrel with the maximum diameters occurring at 50% (±15%) of the height of the column (sites. No. 4, No. 6, No. 7; Fig. 8, Fig. 9, Fig. 12-15) and an asymmetrical barrel with the maximum diameters at the lower parts of the columns – at approximately 70% of the height of the column, counting from the terrain surface (sites No. 3, No. 5, No. 8; Fig. 6, Fig. 7, Fig. 10, Fig. 11, Fig. 16, Fig. 17). The smallest diameters were either at the heads or at the base of the columns. For barrel-like columns the ratios between the diameter of the column and the diameter of the pounder were equal to 1.4–2.8, for asymmetrical barrel columns, it was, respectively, 1.5–2.8. The ratios of the maximum to minimum column diameters were 1.13–1.71 (barrel-like columns) and 1.33–1.83 (asym-

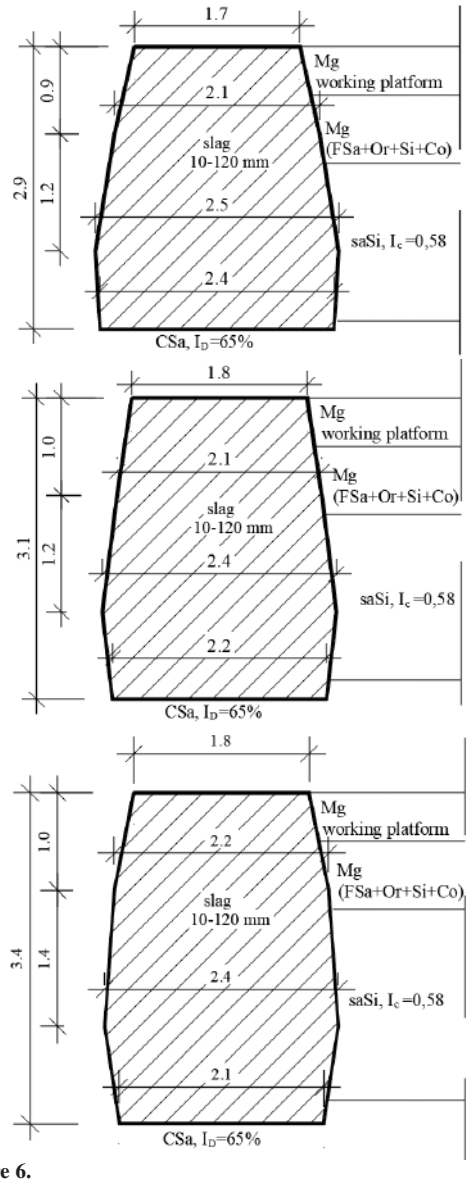

Figure 6.
Shapes of columns at site No. 3.: C5 (top), C6 (middle), C7 (bottom)

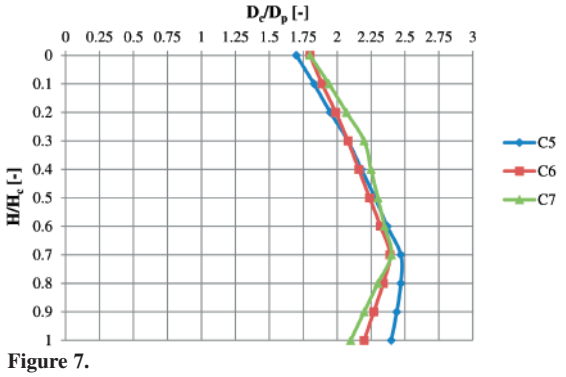

Figure 7.
Dependence between the ratio of the column and pounder diameters (D_c/D_p) and the relative depth (H/H_c) – Site No. 3, columns C5, C6 and C7

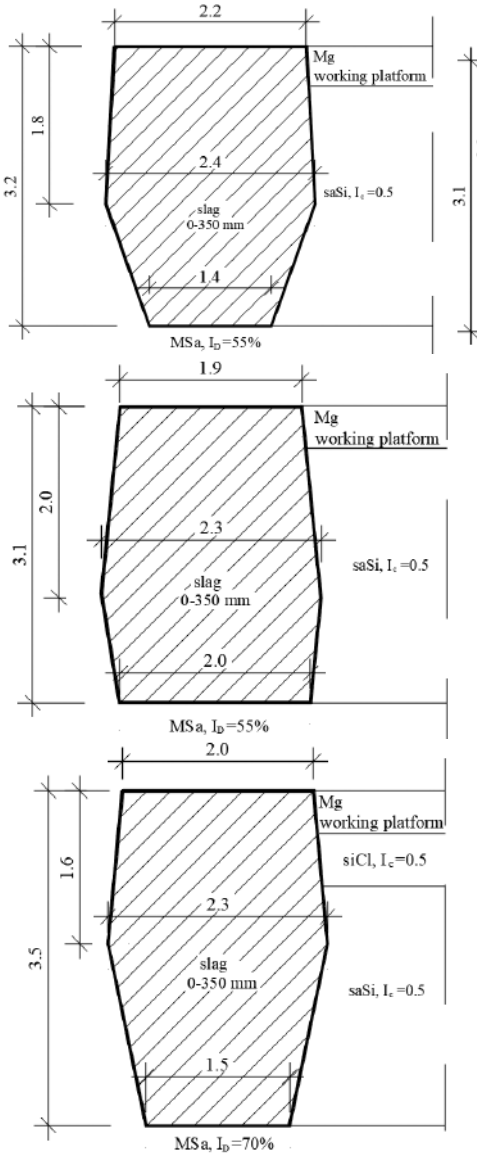

Figure 8.
Shapes of columns at site No. 4: C8 (top), C9 (middle), C10 (bottom)

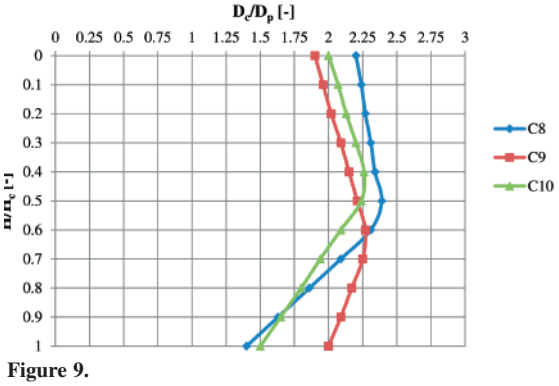

Figure 9.
Dependence between the ratio of the column and pounder diameters (D_c/D_p) and the relative depth (H/H_c) – Site No. 4, columns C8, C9 and C10

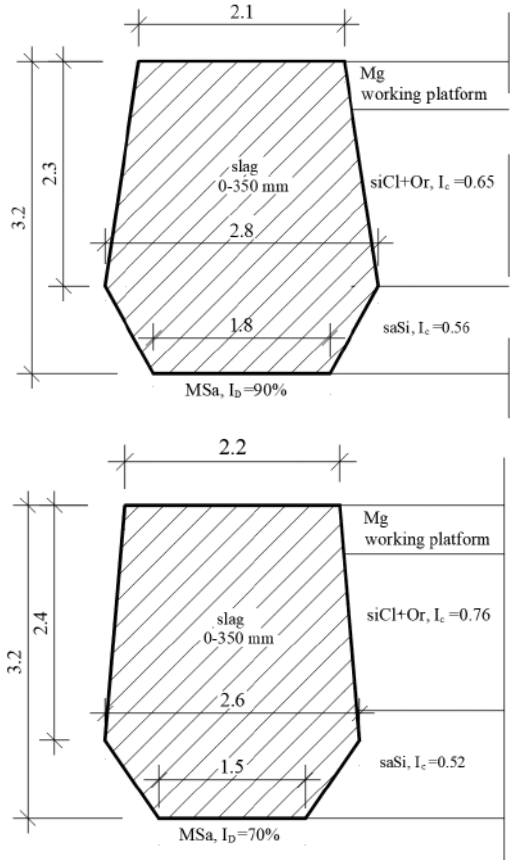

Figure 10.
Shapes of columns at site No. 5: C11 (top), C12 (bottom)

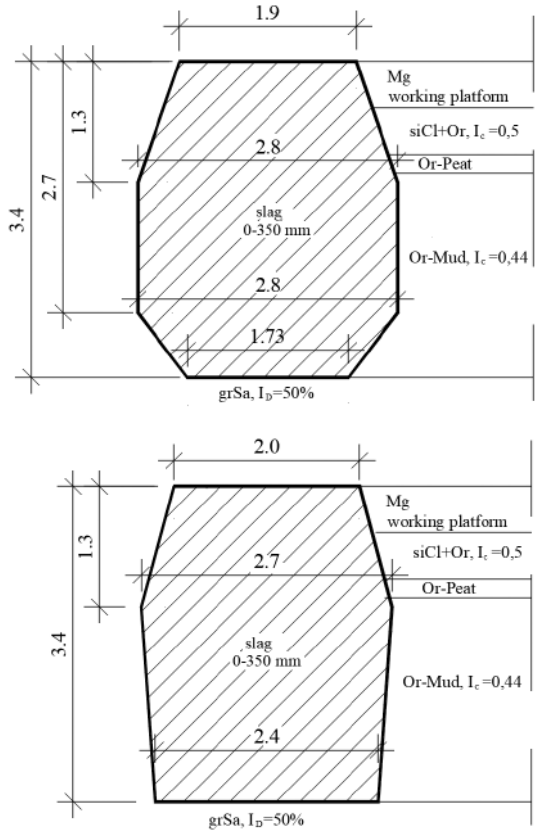

Figure 12.
Shapes of columns at site No. 6: C13 (top), C14 (bottom)

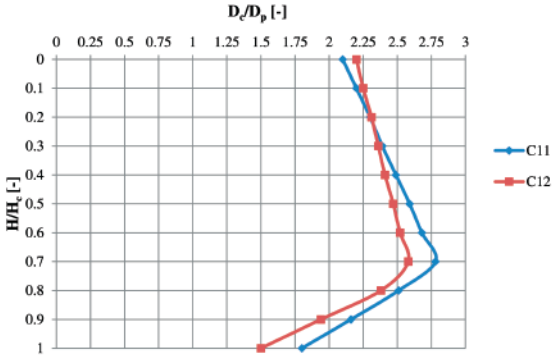

Figure 11.
Dependence between the ratio of the column and pounder diameters (D_c/D_p) and the relative depth (H/H_c) – Site No. 5, columns C11 and C12

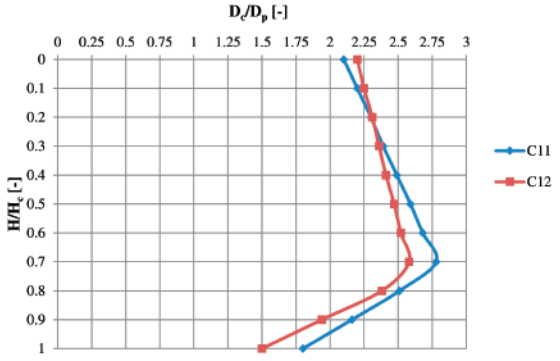

Figure 13.
Dependence between the ratio of the column and pounder diameters (D_c/D_p) and the relative depth (H/H_c) – Site No. 6, columns C13 and C14

metrical barrel-like columns).

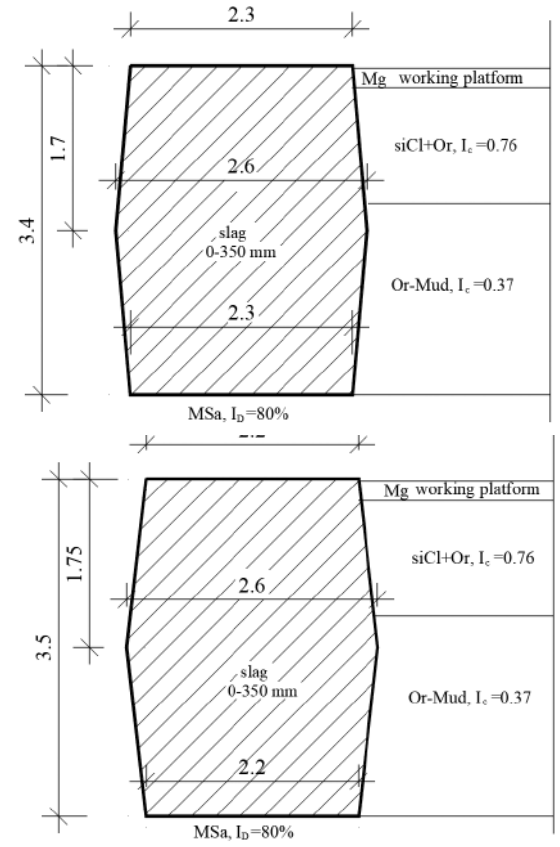

Figure 14.
Shapes of columns at site No. 7: C15 (top), C16 (bottom)

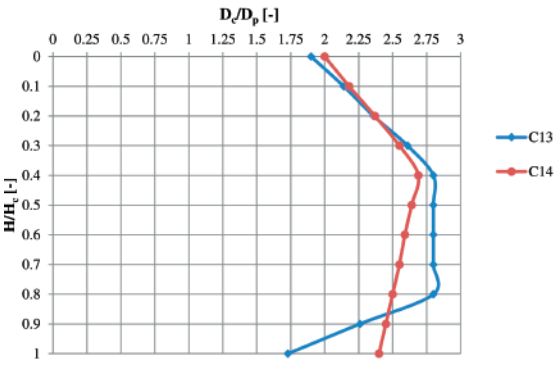

Figure 15.
Dependence between the ratio of the column and pounder diameters (D_c/D_p) and the relative depth (H/H_c) – Site No. 7, columns C15 and C16

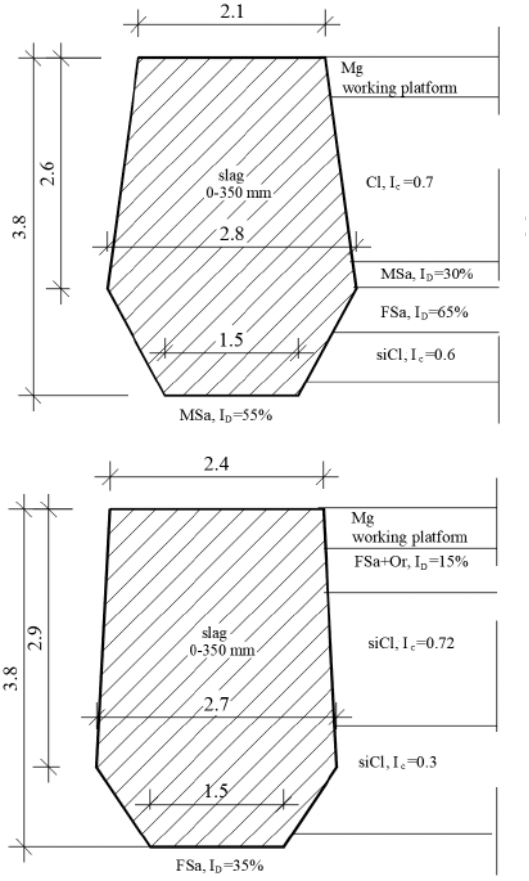

Figure 16.
Shapes of columns at site No. 8: C17 (top), C18 (bottom)

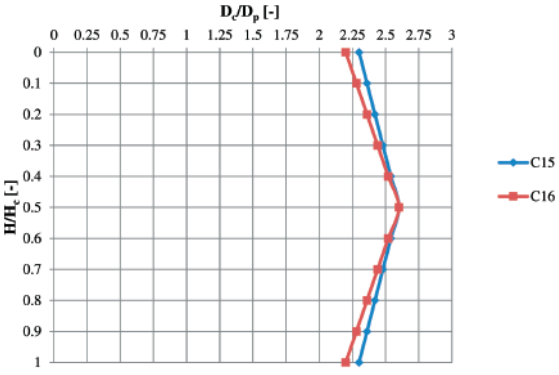

Figure 17.
Dependence between the ratio of the column and pounder diameters (D_c/D_p) and the relative depth (H/H_c) – Site No. 8, columns C17 and C18

5. DISCUSSION

The influence of the thickness of the weak subsoil on the shapes of the columns, noticed in [15] was confirmed. It shall be emphasized that the shapes of the DR columns do not have to be similar only to a cylinder, like in the work by Gunaratne et al. [26], or a truncated cone like observed by Lo et al. [25] or Chua et al. [5] – see Table 1. The first author and his research team [15, 22, 24] have catalogued also more sophisticated shapes like a symmetrical or an asymmetrical barrel and thanks to the analysis conducted in this research it was possible to establish a relationships between the shape of the column and two factors: (a) the diameter of the pounder and (b) the consistency of the weak soil.

For columns formed in the soft soil of very small thickness ($H_s/H_p \approx 1.0$), the diameters were almost constant with depth ($D_{cmax}/D_{cmin} \approx 1.1$), so the columns were cylindrical. During the construction of these columns, the repeatedly dropped pounder quickly found a rigid stiff soil. It was not necessary to drive the column material deeper – the columns were formed with a small number of pounder drops (Table 4). Large part of the energy was used to push the aggregate horizontally into the soft layer – hence the maximum diameter of the columns was not much smaller than at the other sites even though here the applied energy was much smaller.

As the depth of the weak soil increased, obviously a larger energy was needed to construct the columns of larger lengths. The shape of the columns was no longer cylindrical. When the ratio H_s/H_p was equal to about 1.4 the columns took the shape of a truncated cone with the largest diameter at the base. As reported by the building contractor in the execution logs, during formation of these columns, the bottoms of the initial craters did not reach the bearing soil layers. Thus, the aggregate added to the void and compacted by the pounder was, first of all, pushed vertically into the weak soil below, but also moved horizontally. The direction of the aggregate propagation is best visible when the floating columns (not reaching the load-bearing layer) are formed – see Fig. 18 – they are characterized with semi-circular bases [7]. With further drops of the pounder the diameter of the zone with the replacement material that is being pushed down, increases until its bottom reaches the bearing layer. Then the material at the sides of the zone starts to move downwards, causing additional increase of the column diameter at the bottom of the crater.

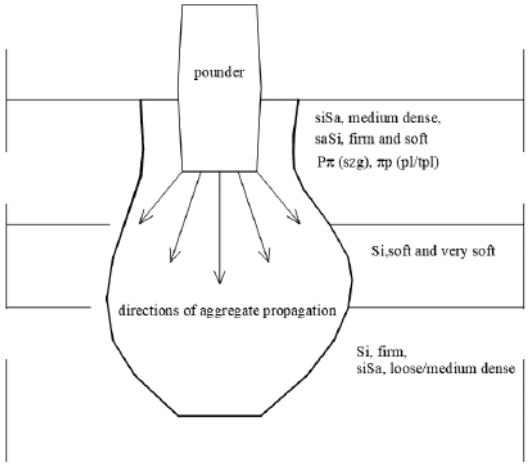

Figure 18.
Propagation of the aggregate during driving a floating DR column [15]

In the longer columns, for which the H_s/H_p ratio was between 1.6 and 2.1, the relative depth (H/H_c) at which the column showed the largest diameter was smaller – equal to about 0.5–0.7, giving the columns the barrel-like shape. This mechanism may be explained in a following way: when the distance between the bottom of the crater and the bearing layer is large, the semi-circular base of the zone containing the replacement material eventually reaches the strongest layer but the energy of the pounder is not able any more to drive the aggregate located at the sides of the zone downwards. Instead, it is easier to push the material sideways into the soil with the smallest resistance – characterised with the lowest consistency index and/or the highest organic content.

The qualitative relationship between the consistency index of the weakest soil in the profile ($I_{c(min)}$) and the D_{cmax}/D_p ratio is shown in Fig. 19. It is well visible that the lower is the value of the consistency index (the softer is the soil), the larger becomes the column diameter.

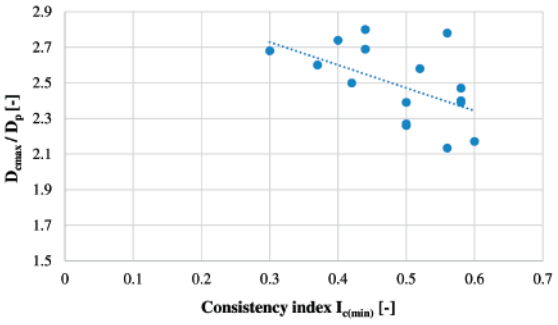

Figure 19.
Relation between the consistency of the weakest soil and the relative maximal diameters of the columns

As the thickness of the weak layer increases, the number of the pounder drops must be larger and therefore higher total energy has to be applied. This results also in the increase of the mean column diameters, as can be seen in Fig. 20.

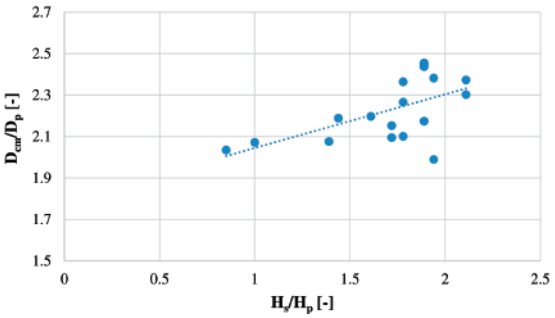

Figure 20.
Relation between the H_s/H_p ratios and the mean relative diameters of columns D_{cm}/D_p

In the analysed cases, there was no direct effect visible of the maximum size of the aggregate grains on the column diameter (Fig. 21). To verify this observation additional tests would be required, in which the columns would have to be formed in the same soil conditions, using the same impact energy, but various aggregate grading.

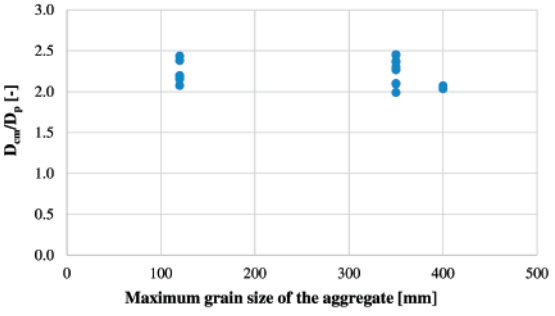

Figure 21.
Relation between the maximum grain size of the aggregate used as the replacement material and the mean relative diameters of the columns D_{cm}/D_p

The extreme ratios between the diameters of the 18 DR columns and diameters of the pounders obtained in this research were equal to D_{cmin}/D_p = 1.4 and D_{cmax}/D_p = 2.8. The results are larger than the ratios obtained by Kumar [4] (1.00–1.25) and Varaksin and Hamidi [19] (1.41). Kumar [4] does not give any information about the excavation of the analysed columns, thus it shall be assumed that the diameters were surveyed at the terrain level. The columns analysed by that author were executed from a working platform (60 cm thick fill) in medium stiff silty clay and sandy silt (without organic content). In case of the research by Varaksin and Hamidi [19] it was clearly stated that the D_c (Table 1) referred to the heads of the columns (executed in clay) and was 1.41 times larger than the diameter of the pounder. In our research the ratios D_{cmin}/D_p and D_{cmax}/D_p calculated using the diameter of the columns' heads are equal to 1.6 or 2.4, respectively. This is 28% to 100% more than observed by Kumar [4] and only 14% more than in the research by Varaksin and Hamidi [19]. In both of the references, however, it cannot be excluded that the diameters of the columns along the depth were larger than at the terrain surface. In the third reference mentioned in Table 1 – by Gunaratne et al. [26] – the diameters of the cylindrical DR columns, executed in organic very soft soils, were 2.4 times larger than the diameter of the pounder. This value is only 8–17% smaller than the results presented in our research in similar ground conditions (columns C11–C16).

6. SUMMARY AND CONCLUSIONS

When the dynamic replacement columns are formed, there is no possibility to keep the direct control over their lengths and diameters. The replacement material is driven into the soil from the ground level by the pounder drops, and during this process, it moves in the vertical and horizontal directions. At the design stage it is necessary to assume the shape and dimensions (diameter and length) of the DR columns. It is possible only based on a comparable experience. At the execution stage of the project this should be verified in pilot tests. So, a large empirical campaign is needed to gather information from different sites, with various ground conditions, and with various technologies applied. The results presented in this paper advance this knowledge and may be useful to the profession.

In the article 18 dynamic replacement columns were analysed. They were executed at eight different sites in fine and organic, stiff to very soft soils. The columns were constructed by means of the pounders weighing 9 or 11.5 Mg, with the height of 1.8 or 2.0 m and diameter of 1.00 or 1.05 m, dropped from the height of 5–15 m. The replacement material was a sandstone or slag aggregate with the grain size of 10–120 mm, 0–350 mm or 0–400 mm. The column lengths varied from 2.0 m to 3.8 m. The ratios of the thickness of the weak layers to the pounder heights was in the range of 0.85–2.11.

Based on the results of this research, it can be concluded that the shape and diameter of the columns are influenced by the diameter of the pounder and the parameters of the weak soils: their physical state, thickness and depth. The following observations were taken:

- Columns formed in the weak soils of relatively small thickness (less than or equal to the pounder height) had a cylindrical shape and a constant diameter along the length. Their diameters were up to 2.2 times larger than the diameters of the pounders used.
- As the thickness of the weak soil increased and the higher total impact energy was applied, the shape of the columns changed. When the soil thickness was about 1.4 times larger than the pounder height, the columns took a shape of a truncated cone with the largest diameter at the base, equal to about 2.5 D_p, and the smallest diameter at the head and equal to about 1.65 D_p.
- The columns formed in the weak soil as thick as 1.6 to 2.1 times the height of the pounder had a symmetrical or asymmetrical barrel shape. Their largest diameters occurred between 50% and 70% of the column length, measured from the terrain surface, and corresponded to the depth of the weakest layer. The maximum and minimum diameters of these columns were about 2.3 to 2.8 and 1.4 to 2.3 times larger, respectively, than the diameter of the pounder.

It is worth noting that there is no similar analysis published in the literature. The presented results may have a practical meaning for the engineers designing and executing dynamic replacement columns. When the thickness of the weak soil, its type and state are known and the technological parameters are similar to the ones presented in this paper, it is possible to predict the shape and diameter of the columns depending on the diameter of the pounder.

REFERENCES

[1] Hamidi, B. (2014). Distinguished Ground Improvement Projects by Dynamic Compaction or Dynamic Replacement (PhD thesis, Curtin University), Australia, Bentley.

[2] Stinnette, P., Gunaratne, M., Mullins, G., & Thilakasiri, S. (1997). A quality control programme for performance evaluation of dynamic replacement of organic soil deposits. Geotechnical and Geological Engineering, 15, 283–302.

[3] Chua, Ch., Lai, M., Hoffmann, G., & Hawkins, B. (2008). Ground improvement using dynamic replacement for NCIG Cet3 Coal Stockyard. Australian Geomechanics, 43(3), 63–74.

[4] Kumar, S. (2001). Reducing liquefaction potential using dynamic compaction and construction of stone columns. Geotechnical and Geological Engineering, 19, 169–182.

[5] Chua, Ch., Lai, M., Hoffmann, G., & Hawkins, B. (2008). Ground improvement using dynamic replacement for NCIG Cet3 Coal Stockyard. Australian Geomechanic, 43(3), 63–74.

[6] Wong, P., Lacazedieu, M. (2004). Dynamic Replacement Ground Improvement – Field performance Versus Design Prediction for the Alexandria City Centre Project. Advances in geotechnical engineering: The Skempton conference, 1193–1204.

[7] Sękowski. J., Kwiecień, S., & Kanty, P. (2018). The Influence of Dynamic Replacement Method on the Adjacent Soil. International Journal of Civil Engineering, 16(10), 1515–1522.

[8] Kanty, P., Sternik, K., & Kwiecień, S. (2015). Numerical analysis of consolidation of embankment subsoil reinforced with dynamic replacement stone columns. Czasopismo Techniczne, 112(2), 79–100.

[9] Barron, R. (1948). Consolidation of fine-grained soils by drain wells. Transactions ASCE, 113, 718–742.

[10] Hansbo, S. (1981). Consolidation of fine-grained soils by prefabricated drains. Proc.10th Conf. Soil Mechanics and Foundations Engineering, 3, 677–682.

[11] Indraratna, B.,& Redana, I. (2000). Numerical modeling of vertical drains with smear and well resistance installed in soft Clay. Canadian Geotechnical Journal, 37, 132–145.

[12] Castro, J., Karstunen, M., & Sivasihamparam, N. (2014). Influence of stone column installation on settlement reduction. Computers and Geotechnics, 59, 87–97.

[13] Han, J., & Ye, S. (2001). Simplified method for consolidation rate of stone column reinforced foundations. Journal of Geotechnical and Geoenvironmental Engineering ASCE, 127(7), 597–603.

[14] Hassen, G., de Buhan, P., & Abdelkrim, M. (2010). Finite element implementation of a homogenized constitutive law for stone column-reinforced foundation soils, with application to the design of structures. Computers and Geotechnics, 37, 40–49.

[15] Kwiecień, S. (2021). Influence of load plates diameters, shapes of columns and columns spacing on results of load plate tests of columns formed by dynamic replacement. Sensors, 21(14), 1–20.

[16] Castro, J. (2017). Modeling stone columns. Materials, 10(7), 782, 1–23.

[17] Razeghi, H. R., Niroumand, B., & Ghiassian, H. (2011). A field study of the behavior of small-scale single rammed aggregate piers, testing methodology and interpretation. Scientia Iranica, 18(6), 1198–1206.

[18] Tarawneh, B., AL Bodour, W., Shatnawi, A., & Al Ajmib, K. (2019). Field evaluation and behavior of the soil improved using dynamic replacement. Case Studies in Construction Materials, 10. 1–11.

[19] Varaksin, S., & Hamidi, B. (2012). Ground improvement case histories and advances in practice. In B. Indraratna, Ch. Rujikiatkamjorn, & J. Vinod (Eds.), Proceedings of the International Conference on Ground Improvement and Ground Control. Research Publishing, Singapore, Singapore, 209–222.

[20] Wong, P. (2004). Ground Improvement Case Studies Chemical Lime Piles and Dynamic Replacement. Australian Geomechanics Society Journal, 39(2), 1–15.

[21] Yee, Y., & Chua, C. (2009). Ground improvement techniques for east coast expressway phase 2, Malaysia. In C. F. Leung, J. Chu, & R. F. Shen (Eds.), Ground Improvement Technologies and Case Histories. Research Publishing Services, Singapore, Singapore, 705–712.

[22] Kwiecień, S. (2008). Analiza teoretyczna i doświadczalna wzmocnienia podłoża metodą wymiany dynamicznej (Theoretical and experimental analysis of ground improvement by dynamic replacement method, PhD thesis, Silesian University of Technology), Gliwice, Poland, Gliwice.

[23] Kwiecień, S., & Sękowski, J. (2008). Research on the shape of stone columns formed in the ground with the use of dynamic replacement method. Architecture Civil Engineering Environment, 1(2), 65–72.

[24] Kwiecień, S., & Sękowski, J. (2012). Kolumny kamienne formowane w technologii wymiany dynamicznej (Stone columns formed with the use of dynamic replacement technology). Gliwice: Silesian University of Technology Publishing House.

[25] Lo, K. W., Lee, S. L., & Ooi, P. L. (1990). Unified approach to ground improvement by heavy tamping. Journal of Geotechnical Engineering, 116(3): 514–527.

[26] Gunaratne, M., Mullins, G., Stinnette, P. & Thilakasiri, S. (1997). Stabilization of Florida organic material by dynamic replacement. Department of Civil and Environmental Engineering, Tampa, Florida, Final report of State Project no. 99700-3541-119.

[27] Sękowski, J., Kwiecień, S., & Kanty, P. (2013). Badania polowe kształtu wbijanych kolumn kamiennych z wykorzystaniem metody elektrooporowej (Field tests of the shape of dynamic replacement stone columns using the electrical resistivity method). Inżynieria Morska i Geotechnika, 4, 523–527.

[28] ISO 14688:2017. Geotechnical investigation and testing — Identification and classification of soil.